International Aircraft Materials
Fire Test Forum Meeting

Materials Oil Burner Test Update

Presented to: International Aircraft Materials Fire Test Forum

By: Tim Salter, Atlantic City, NJ

Date: October 16-17, 2023

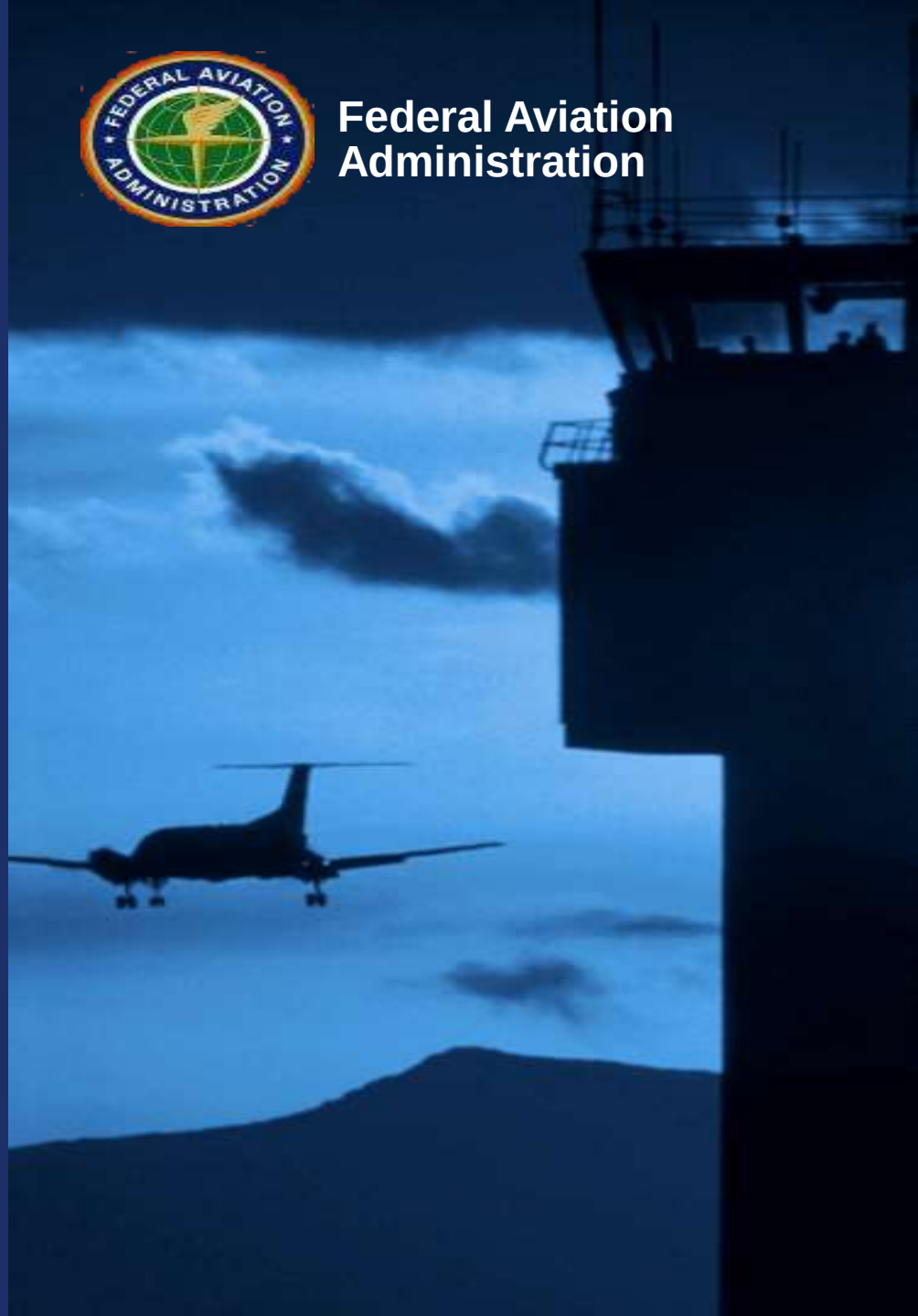

Federal Aviation Administration

Outline

- **Updates to Materials Fire Test Handbook**
  - Chapter 7 (seat cushion)
  - Chapter 8 (cargo liner)
  - Chapter 24 (insulation burnthrough)

- **Report being published on use of an air shroud for the cargo liner oil burner test**

Updates to Handbook Chapters 7 and 8

Updates to Handbook Chapters 7 and 8

- **Updates have been made to chapter 7 (seat cushion oil burner test) and chapter 8 (cargo liner oil burner test)**
- **Old red text indicated past updates which have been updated to black text**
- **Date stamp on chapters indicate a most recent update of June 2023**

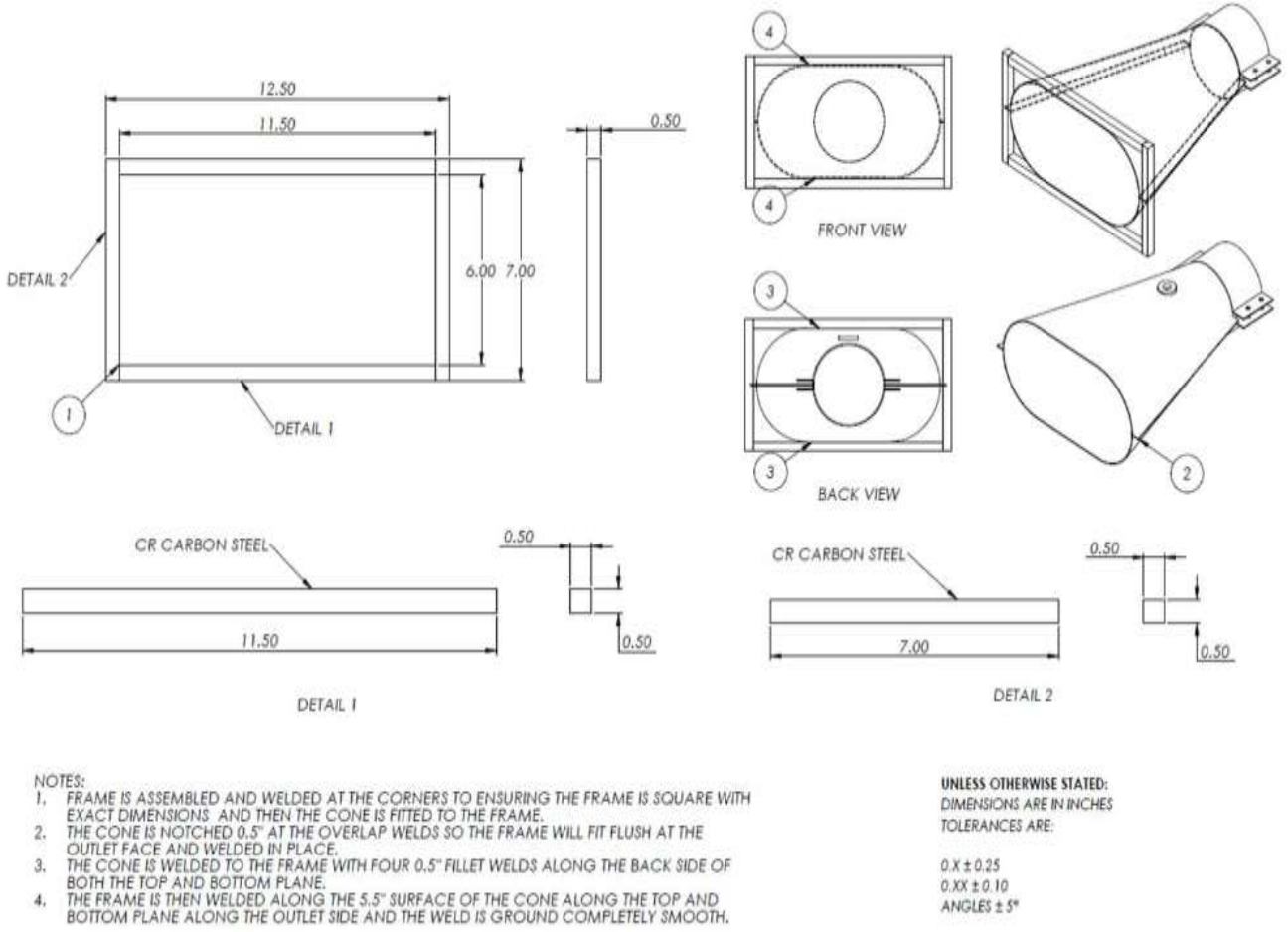

Updates to Handbook Chapters 7 and 8

ranet | Handbook : FAA Fire Safety | Salter-0317-SeatCargoAirflow.pc

fire.tc.faa.gov/Handbook

Fire.tc.faa.gov/Handbook

	Heat Release Rate Calibration Factor
Chapter 6	Smoke Test for Cabin Materials Lab Test Form - NBS Smoke Burner Test Report on the Smoke Chamber Furnace New Furnace
Chapter 7 **June 2023 Update**	Oil Burner Test for Seat Cushions Advisory Circular on Flammability Requirements for Aircraft Seat Cushions. Lab Test Form - Oil Burner Seat Cushion Test Seat Cushion Test Procedures Training Video: View Online | Download Sonic Burner Assembly and Operation: View Online | Download
Chapter 8 **June 2023 Update**	Oil Burner Test for Cargo Liners Lab Test Form - Oil Burner Cargo Liner Test Cargo Liner Test Procedures Training Video: View Online | Download Sonic Burner Assembly and Operation: View Online | Download
Chapter 9 **March 2023 Updated**	Radiant Heat Testing of Evacuation Slider, Ramps, and Rafts

Updates to Handbook Chapters 7 and 8

- **Both chapters have received an update of the burner cone diagram which outlines the design of steel reinforcement frame for the burner cone**
- **Frame is a 12.5” x 7” rectangle constructed from ½” square stock steel**
- **Frame is welded to the cone at the exit plain at the top, bottom, and welded seams on the sides of the cone**
- **Use of the frame is optional for testing**
- **Can be used on Sonic or legacy type burners**

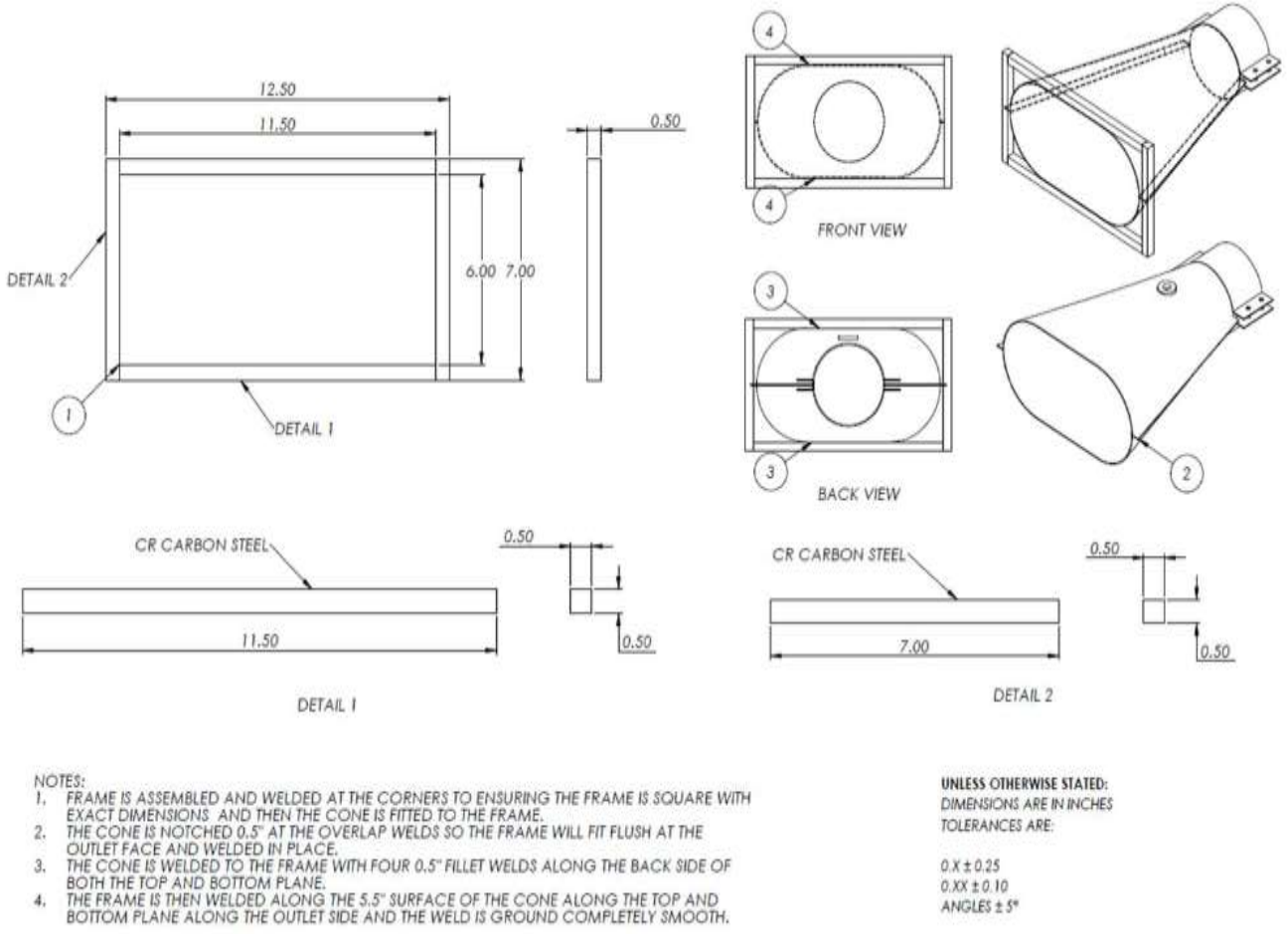

Updates to Handbook Chapters 7 and 8

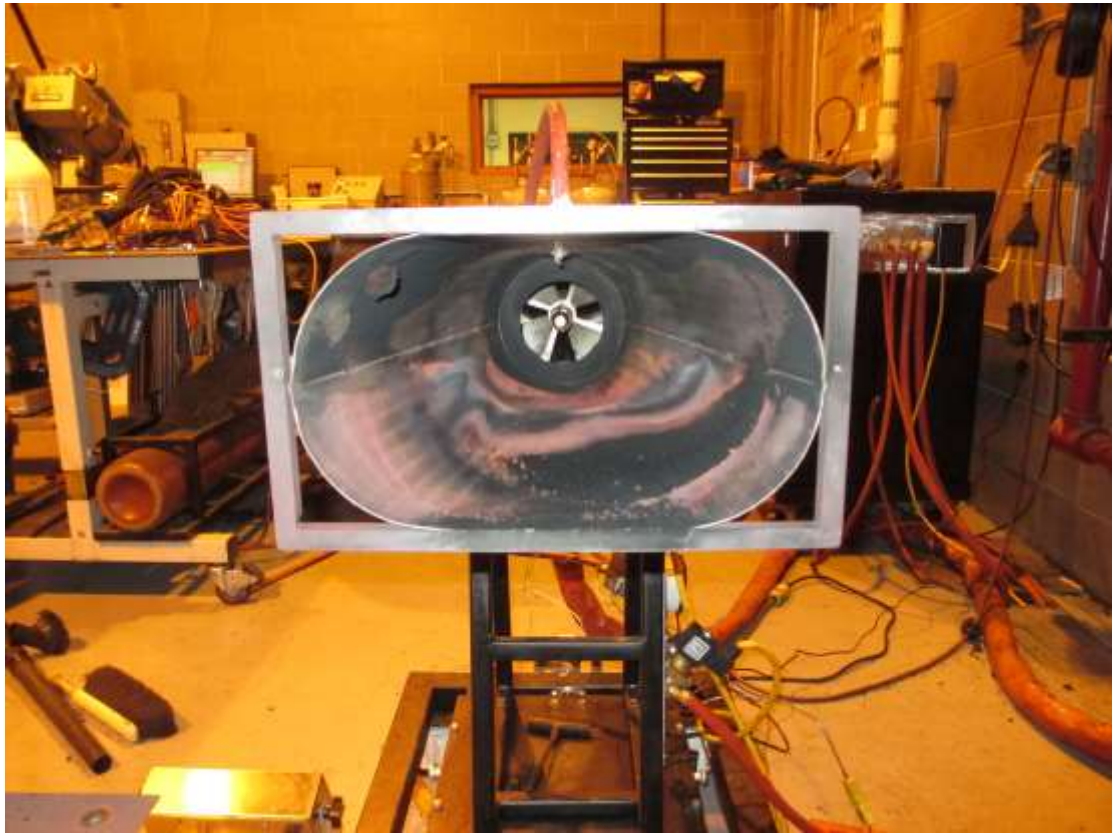

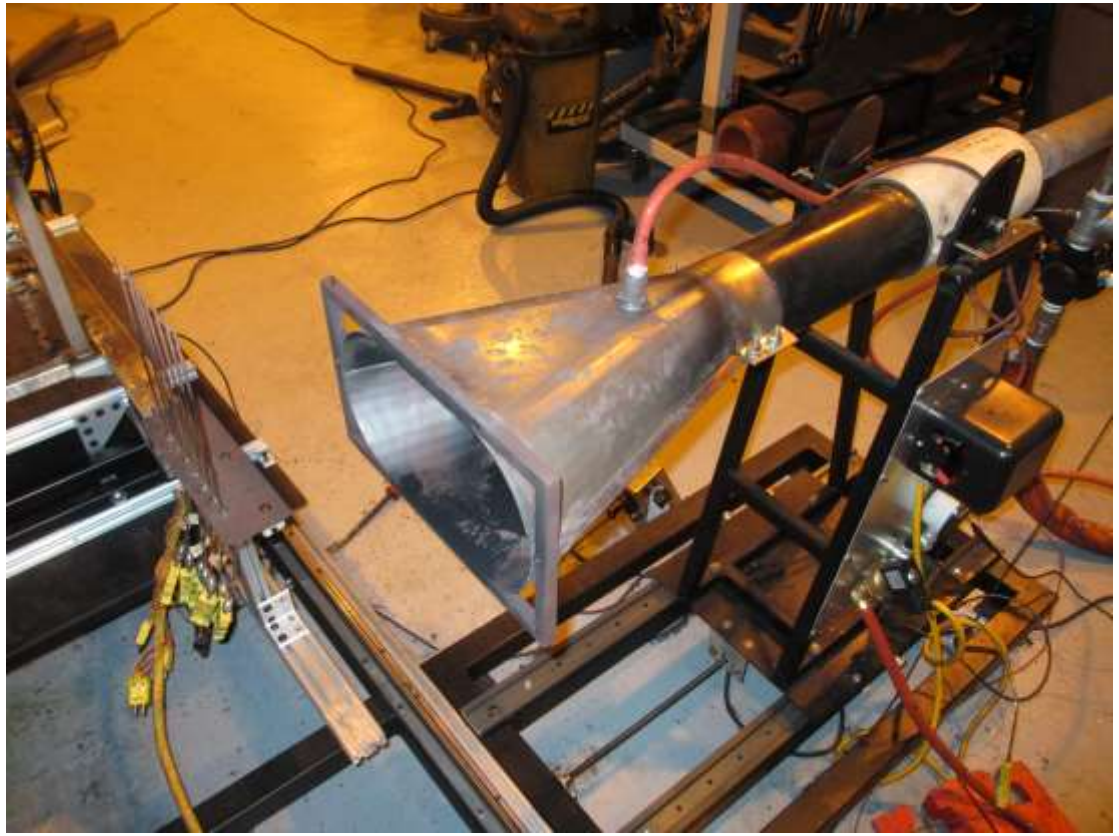

Updates to Handbook Chapters 7 and 8

- **Reasoning for cone reinforcement frame is to reduce the chance of cone warpage which can lead to the cone being out of spec and the burner producing an undesirable flame pattern**

- **The seat cushion test method was used to evaluate cone reinforcement as it is the more sensitive of the oil burner tests**
  - More likely to show a difference in test results during comparison tests

- **Testing with the framed cone showed the test results to be no different than those obtained using a cone without the reinforcement frame**

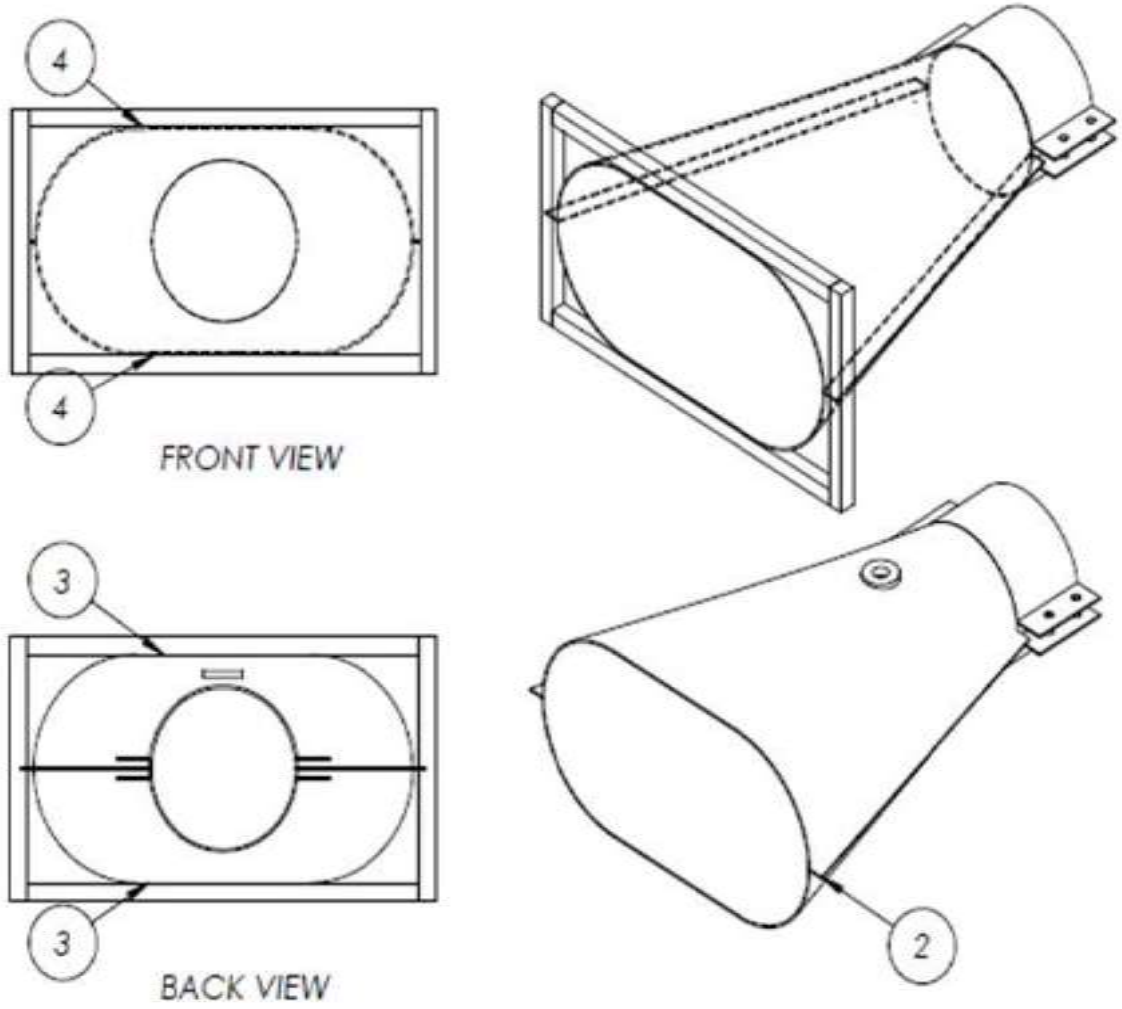

Updates to Handbook Chapters 7 and 8

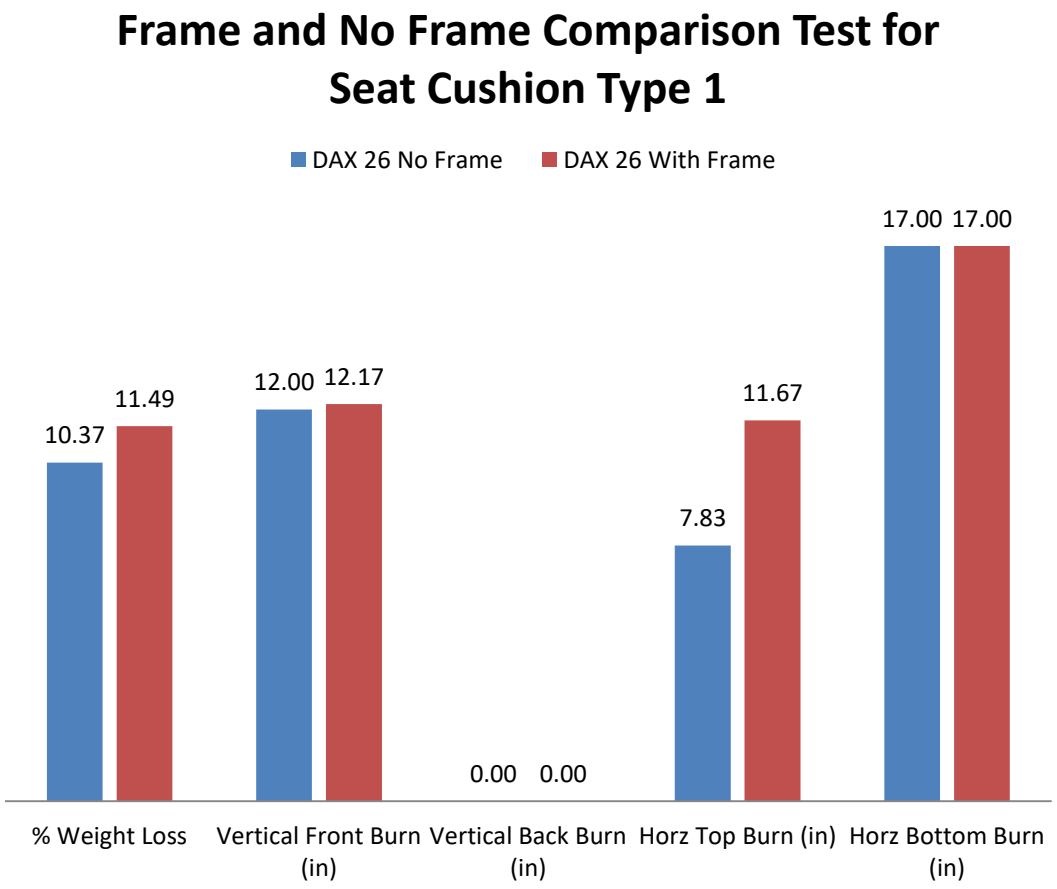

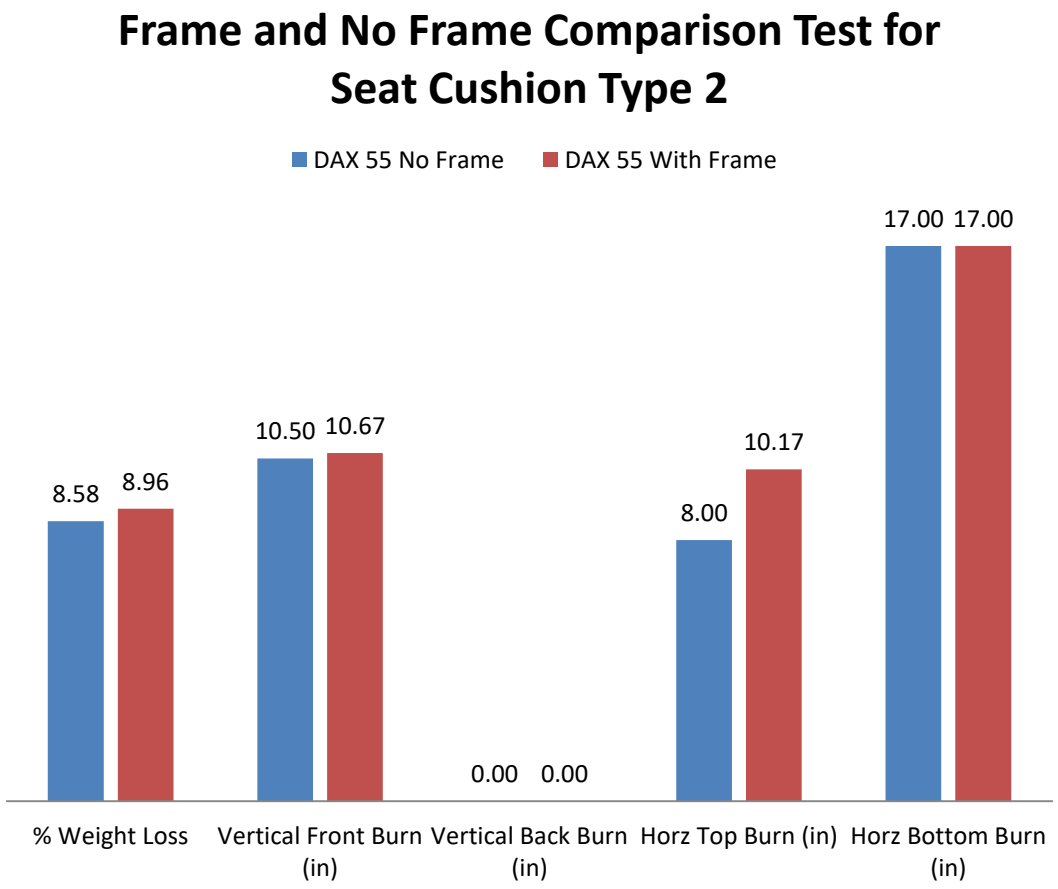

Updates to Handbook Chapter 24

Updates to Handbook Chapter 24

- **Chapter 24 of the Fire Test Handbook (oil burner insulation burnthrough) has also been updated**
- **Old red text has been updated to black**
- **New updates are written in red text**
- **Cone reinforcement frame added**

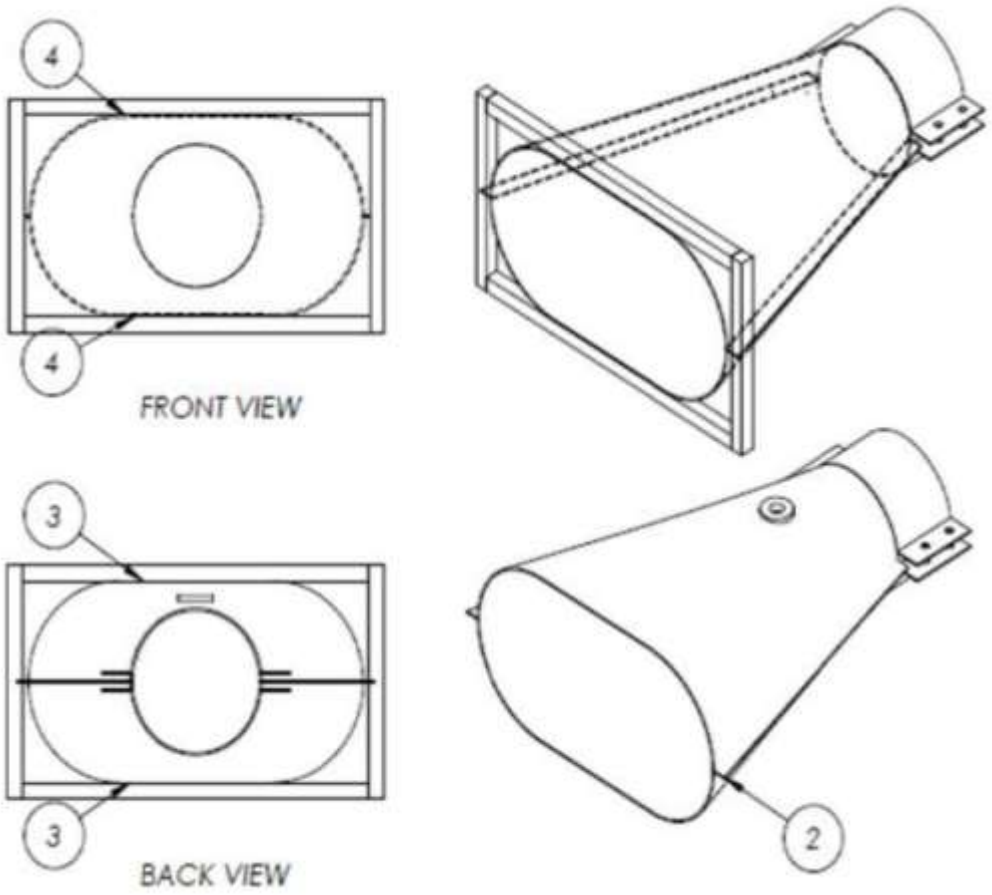

Updates to Handbook Chapter 24

- **Updates to the recommended fuel nozzle type and air pressure setting have been made**

- **Test data showed the previous fuel nozzle and air pressure setting to be too severe during testing**
  - Delevan 6.0 gal/hr type-B
  - Air pressure setting of 65 psi

- **New data shows need for change to make test results more equivalent to original Sonic burner test results**
  - Original meaning stator with igniters and Monarch nozzle

- **These updates apply to the <u>Sonic burner only</u>**

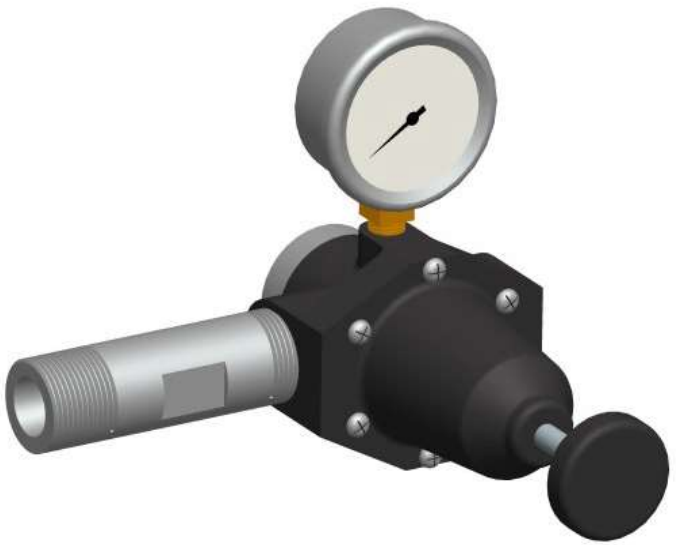

Updates to Handbook Chapter 24

- **Testing showed the previous Delevan 6.0 gal/hr Type-B solid spray nozzle was potentially creating an excessive hot spot in the center of the flame**

- **A more suitable Delevan 6.0 gal/hr Type-W general purpose spray nozzle made for a more even and full flame that is more representative of an actual pool fire outside of an aircraft after an incident**

Fuel Nozzle

The fuel nozzle for the Sonic burner should be an 80-degree solid conical spray pattern oil burner nozzle. The nozzle flowrate will depend on the test method. The rated flow rate provided by the manufacturer is achieved when applying a 100 lb/in^2 (0.71 MPa) pressure to the nozzle. If a different flow rate is desired, the pressure can be adjusted accordingly to achieve a wide range of flow rates. In general, the flow rate is related to the pressure by:

$$F_d = F_r \sqrt{P_d / P_r}$$

In which F_d is the desired flow rate, F_r is the rated flow rate, P_d is the desired pressure, and P_r is the rated pressure, typically 100 psig (0.71 MPa). For example, if a 5.5-gal/hr (20.8 L/hr) rated nozzle is operated at 120 lb/in^2 (0.83 MPa), a flow rate of 6.0 gal/hr (22.7 L/hr) will be achieved. A Delavan, 80-degree, 6.0 gal/hr (22.68 L/hr), all purpose W-type spray nozzle has been found suitable for this application.

Updates to Handbook Chapter 24

- **Testing also showed the air pressure setting of 65 +/- 2 psi may have been too high and can cause excessive mechanical wear to the test samples and potentially lead to premature failures**

- **A lower air pressure of 60 +/- 2 psi which had been used for the original Sonic burne. setup was updated in the text**

- **New updates in chapter 24 written in red text**

Volumetric Air Flow Control

The volumetric airflow is controlled via a regulated sonic nozzle. Adjust the upstream supply air pressure to 60 ± 2 lbs/in^2 (0.41 ± 0.014 MPa). The intake air temperature must be maintained within the range of 40°F to 60°F (4°C to 16°C). For additional details, refer to sections "Sonic Nozzle" and "Air Pressure Regulator" in this supplement.

Cargo Liner Air Shroud Report

Cargo Liner Air Shroud Report

- **Currently publishing technical report regarding study and use of an air shroud for cargo liner oil burner testing**

- **Report describes process of development, testing and interlab study results of an air shroud used with the cargo liner test method**

Cargo Liner Air Shroud Report

- The shroud was designed to improve test repeatability and reduce influence of ventilation airflow currents on test data/results
- Interlab study showed the shroud to be somewhat effective in certain labs while ineffective in others
- Possibly adding air shroud to chapter 8
- Would be optional for use while testing

Questions?

Timothy.salter@faa.gov