AAR-90/02 c.2

PB90-910402
NTSB/AAR-90/02

NATIONAL TRANSPORTATION SAFETY BOARD

RECEIVED
OCT 18 1990
ERAU LIBRARY

AIRCRAFT ACCIDENT REPORT

EVERGREEN INTERNATIONAL AIRLINES
McDONNELL DOUGLAS DC-9-33F, N931F
SAGINAW, TEXAS
MARCH 18, 1989

See also: NTSB Reporter Sept 1990, p. 3

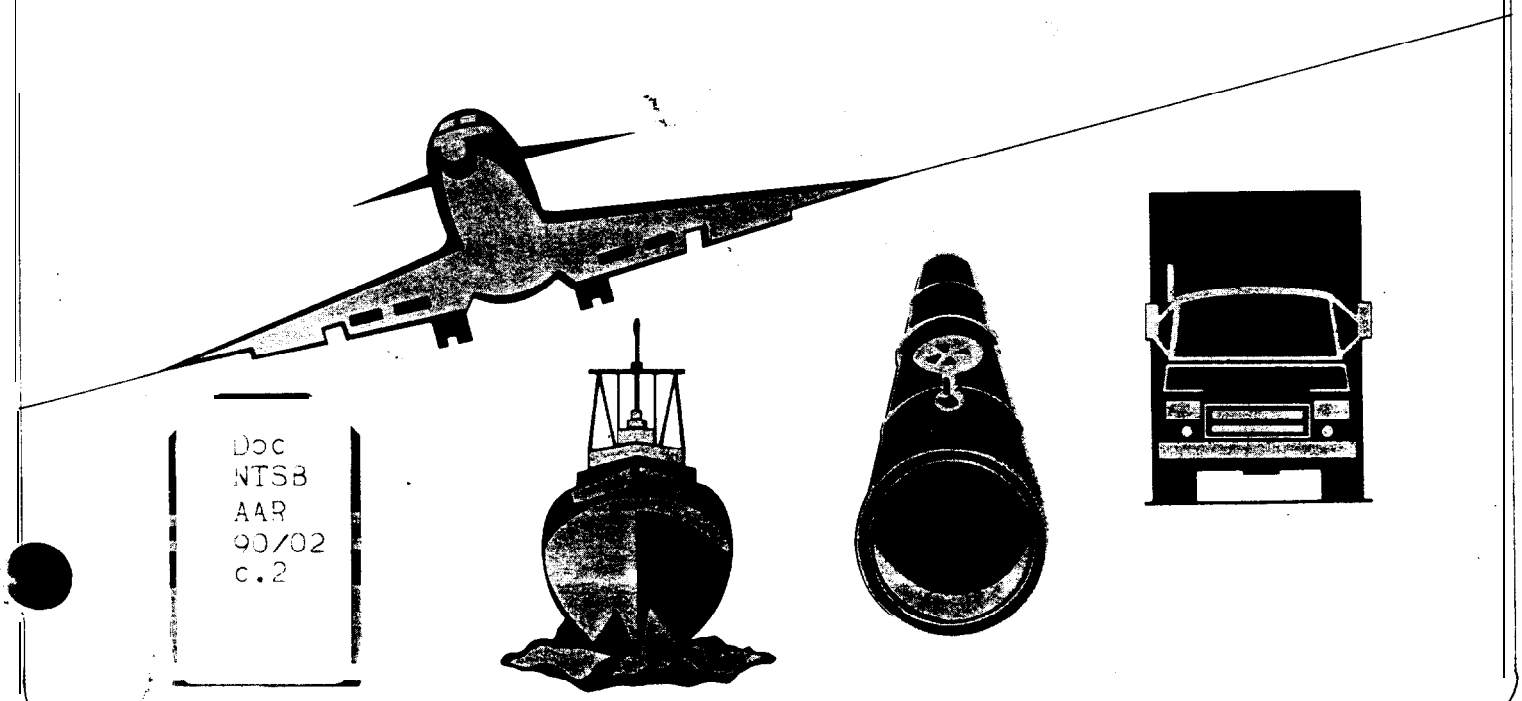

Doc
NTSB
AAR
90/02
c.2

JACK R. HUNT MEMORIAL LIBRARY
DAYTONA BEACH, FLORIDA 32114 • 904-239-6595

The National Transportation Safety Board is an independent Federal agency dedicated to promoting aviation, railroad, highway, marine, pipeline, and hazardous materials safety. Established in 1967, the agency is mandated by the independent Safety Board Act of 1974 to investigate transportation accidents, determine the probable cause of accidents, issue safety recommendations, study transportation safety issues, and evaluate the safety effectiveness of government agencies involved in transportation.

The Safety Board makes public its actions and decisions through accident reports, safety studies, special investigation reports, safety recommendations, and statistical reviews. Copies of these documents may be purchased from the National Technical Information Service, 5285 Port Royal Road, Springfield, Virginia 22161. Details on available publications may be obtained by contacting:

National Transportation Safety Board
Public Inquiries Section, RE-51
800 independence Avenue, S.W.
Washington, D.C. 20594
(202)382-6735

TECHNICAL REPORT DOCUMENTATION PAGE

1. Report No. NTSB/AAR-90/02	2. Government Accession No. PB90-910402	3. Recipient's Catalog No.
4. Title and Subtitle Aircraft Accident Report--Evergreen International Airlines, McDonnell Douglas DC-9-33F, N931F, Saginaw, Texas, March 18, 1989		5. Report Date April 23, 1990
		6. Performing Organization Code
7. Author(s)		8. Performing Organization Report No.
9. Performing Organization Name and Address National Transportation Safety Board Office of Aviation Safety Washington, D.C. 20594		10. Work Unit No. 5094A
		11. Contract or Grant No.
		13. Type of Report and Period Covered Aircraft Accident Report March 18, 1989
12. Sponsoring Agency Name and Address NATIONAL TRANSPORTATION SAFETY BOARD Washington, D.C. 20594		14. Sponsoring Agency Code
15. Supplementary Notes		

16. Abstract

This report explains the crash of an Evergreen International Airlines McDonnell Douglas DC-09-33F N931F, in Saginaw, Texas, on March 18, 1989. The safety issues discussed in the report include the cargo door closing procedures on DC-9 airplanes; the external cargo door markings on DC-9 airplanes; the door warning switch electrical wiring on DC-9 airplanes; and the actions of the carrier and the Federal Aviation Administration concerning these issues preceding the accident. Recommendations addressing these issues were made to the Federal Aviation Administration.

see also: NTSB Reporter Sept 1990, p 3

17. Key Words Control, loss of Cargo compartment door Procedures inadequate		18. Distribution Statement This document is available to the public through the National Technical Information Service, Springfield, Virginia 22161	
19. Security Classification (of this report) UNCLASSIFIED	20. Security Classification (of this page) UNCLASSIFIED	21. No. of Pages 85	22. Price

NTSB Form 1765.2 (Rev. 5/88)

CONTENTS

EXECUTIVE SUMMARY v

1. FACTUAL INFORMATION
1.1 History of the Flight 1
1.2 Injuries to Persons 5
1.3 Damage to the Airplane 5
1.4 Other Damage 5
1.5 Personnel Information 5
1.5.1 The Captain 5
1.5.2 The First Officer 5
1.6 Aircraft Information 6
1.6.1 General Aircraft Information 6
1.6.2 Main Cargo Door Description and Closing Procedure 6
1.6.3 Main Cargo Door Airworthiness Directive (AD) Compliance 8
1.6.4 Main Cargo Door Service Bulletin (SB) Compliance 14
1.6.5 Main Cargo Door Maintenance Discrepancies 17
1.7 Meteorological Information 17
1.8 Aids to Navigational 18
1.9 Communications 18
1.10 Aerodrome Information 18
1.11 Flight Recorders 18
1.11.1 The Flight Data Recorder 18
1.11.2 The Cockpit Voice Recorder 19
1.11.3 Recorded Air Traffic Control Radar Data 20
1.12 Wreckage and Impact Information 20
1.12.1 General Wreckage Distribution 20
1.12.2 General Component Damage 20
1.12.3 Main Cargo Door and Associated Component Damage 20
1.13 Medical and Pathological Information 23
1.14 Fire 23
1.15 Survival Aspects 23
1.16 Tests and Research 23
1.16.1 Cargo Door Hydraulic Component Tests 23
1.16.1.1 General 23
1.16.1.2 Isolation Valve 24
1.16.1.3 Lockpin Actuating Cylinder 25
1.16.1.4 Cargo Door Latch/Lock Limit Switch 25
1.16.1.5 External Lockpin Control Handle Markings 25
1.16.2 Other Airplane Component Tests 26
1.16.3 Correlation of Flight Recorder and ATC Radar Data 29
1.16.4 Airplane Performance 30
1.17 Additional Information 30
1.17.1 Hazardous Cargo/Cargo Loading 30
1.17.2 Other Instances of Cargo Door Openings 31
1.17.3 Ground Proximity Warning System 32
1.17.4 Corrective Actions 33
1.17.4.1 Evergreen International Airlines 33
1.17.4.2 McDonnell Douglas Corporation 33
1.17.4.3 The Federal Aviation Administration 34

2. ANALYSIS
2.1 General 35
2.2 Inflight Opening of the Cargo Door 36
2.3 Loss of Airplane Control 40

3. CONCLUSIONS
3.1 Findings 43
3.2 Probable Cause 44

4. RECOMMENDATIONS 45

5. APPENDIXES
Appendix A--Investigation and Hearing 47
Appendix B--Personnel Information 48
Appendix C--Airplane Information 49
Appendix D--Cockpit Voice Recorder Transcript 50
Appendix E--Airplane Performance Study Material 80

EXECUTIVE SUMMARY

On March, 18, 1989, an Evergreen International Airlines McDonnell Douglas DC-9-33F, registered in the United States as N931F, crashed during the turn to final approach as the pilot was attempting to return to Carswell Air Force Base (AFB), Fort Worth, Texas after a cargo door opened. This cargo flight was on an instrument flight rule (IFR) flight plan and was being operated in accordance with Title 14 Code of Federal Regulations (CFR) Part 121. Night visual meteorological conditions existed at the time of the accident. The captain and first officer, the only persons onboard, were killed.

The National Transportation Safety Board determines that the probable cause of this accident was the loss of control of the airplane for undetermined reasons following the inflight opening of the improperly latched cargo door.

Contributing to the accident were inadequate procedures used by Evergreen Airlines and approved by the FAA for preflight verification of cargo door security, Evergreen's failure to mark properly the airplane's external cargo door lock pin manual control handle, and the failure of McDonnell Douglas to provide flightcrew guidance and emergency procedures for an inflight opening of the cargo door. Also contributing to the accident was the failure of the FAA to mandate modification to the door-open warning system for DC-9 cargo-configured airplanes, given the previously known occurrences of inflight door openings.

The safety issues discussed in this report include:

- the cargo door closing procedures on DC-9 airplanes
- the external cargo door markings on DC-9 airplanes
- the door warning switch electrical wiring on DC-9 airplanes
- company and FAA actions preceding the accident concerning the above issues.

NATIONAL TRANSPORTATION SAFETY BOARD
WASHINGTON, D.C. 20594

AIRCRAFT ACCIDENT REPORT

EVERGREEN INTERNATIONAL AIRLINES
McDONNELL DOUGLAS DC-9-33F, N931F
SAGINAW, TEXAS
MARCH 18, 1989

1. FACTUAL INFORMATION

1.1 History of Flight

On March, 18, 1989, an Evergreen International Airlines McDonnell Douglas DC-9-33F, registered in the United States as N931F, crashed during the turn to final approach as the pilot was attempting to return to Carswell Air Force Base (AFB), Fort Worth, Texas after a cargo door opened. This cargo flight was on an instrument flight rule (IFR) flight plan and was being operated in accordance with Title 14 Code of Federal Regulations (CFR) Part 121. Night visual meteorological conditions existed at the time of the accident. The captain and first officer, the only persons onboard, were killed.

The radio call sign for the flight was Logair 931 and the flight number was 4U17. The aircraft was operating under a U.S. Air Force (USAF) airlift contract that called for a regularly scheduled cargo run between Tinker AFB (Oklahoma City), OK, Dyess AFB (Abilene), TX, Kelly AFB (San Antonio), TX, and Carswell AFB, (Fort Worth), TX, with a final return to Tinker AFB. It arrived at Carswell AFB at 0312 c.s.t. The aircraft was off-loaded and then re-loaded with cargo by USAF personnel with no reported problems. No maintenance or servicing was accomplished on N931F and the aircrew reported no mechanical discrepancies.

The cockpit voice recording began at 0142:36, as the crew was progressing through their "Before Start" abbreviated checklist. At about 0145, checklist activity stopped for approximately the next 13 1/2 minutes. Intra-cockpit conversation during this period of time consisted of general conversation unrelated to the accident sequence. This conversation occurred as the crew was awaiting the completion of cargo loading.

At 0200:54, the captain stated "Well, I guess he's done." to the first officer. The first officer's voice was not recorded again until 0202:46. He left the cockpit and did not return to his seat until about that time.

One witness to the loading, taxi-out and departure of the aircraft, a transient aircraft maintenance technician and former USAF maintenance supervisor, stated that it was his practice to stand near the passenger entry door of cargo DC-9s just before taxi-out, in case the crew had any questions about aircraft servicing or cargo loading. He said that when the cargo door was closed, he checked to see that the door was flush with the fuselage, the "locking pin lock indicator" [lockpin manual control handle] was horizontal and the "stub handle" [torque tube drive fitting] was up. In a later written

statement to the Safety Board, this individual correctly described the lockpin manual control handle, but incorrectly described the shape and operation of the torque tube drive fitting. He also stated that the captain was the crewmember he saw in the passenger entry doorway who closed the main cargo door. However the cockpit voice recorder revealed that it was the first officer who closed the door.

At 0202:07, a sound similar to an onboard auxiliary power unit (APU) start-up was recorded on the CVR, followed 20 seconds later by the sound of electrical power being transferred from the ground power unit to the APU. Three seconds later, the ground proximity warning system sounded with two tones and the word "terrain" followed by two more tones and the word 'terrain."

At 0202:46, the following phrases (identified as the first officer's voice) were recorded on the cockpit area microphone (CAM):

> "Cargo door's inspected, tail stand...I've removed it, sill guards are onboard."

These three items were the last three items on the "Before Start" abbreviated checklist.

The crew began running the "Starting Engines" abbreviated checklist at 0204. It was accomplished uneventfully, and was called complete by the first officer twenty-six seconds later. The "After Start" checklist was also accomplished uneventfully and called complete by him at 0206:21.

Logair 931 contacted ground control at 0206:25 for taxi instructions and the flight was told "....taxi to runway 17, intersection departure, 8,500 feet available. Winds are 240 at 10...." The altimeter setting given to the crew was 29.97" Hg. The crew then stated that they wanted the full length of the runway for takeoff. The "taxi" checklist was started at 0207:05. This checklist included setting the flaps at 15 degrees. The checklist was completed at 0208:18. At 0208:34 the local controller cleared the flight for takeoff and gave them new winds of 300 degrees at 6 knots. Following receipt of takeoff clearance, the aircrew completed the "Before Takeoff" abbreviated checklist and taxied onto the runway for takeoff.

Comments on the CVR indicate that the captain was at the controls as the takeoff was initiated and throughout the rest of the flight. V1 speed (calculated by the crew to have been 112 knots) was called out at 0209:44. The rotation speed (calculated‘by the crew to have been 116 knots) was called two seconds later.

Three seconds later, an increase in background noise was recorded on the CAM as the aircraft broke ground and began to climb out. Eight seconds later, the ground proximity warning system sounded four times as the indicated altitude (as recorded on the FDR) dropped from 850 feet to about 775 feet. At 0210:06, the first officer stated "Main cargo door." The captain then told the first officer to declare an emergency and tell the

tower that they were "comin' back around." The crew then raised the landing gear and began a right turn.

At 0210:36, the first officer asked the captain, "Want some help on the rudder"? Two seconds later, a response from the captain was recorded on the CVR, but the response was unintelligible. At 0211:00, the first officer asked the captain if the "Missed Approach/Quick Return" checklist should be accomplished and the captain replied in the affirmative. During this activity, the flaps were confirmed to be at 15° by the first officer while the captain was establishing the aircraft on a downwind leg for runway 17. At 0211:25, the tower instructed the crew to report when the aircraft was on a base leg for runway 17. This was the last tower transmission received by the crew for the remainder of the flight, although the first officer tried several more times to contact both the local controller and the approach controller.

At 0211:51, as the first officer was responding to a request from the captain to determine the landing speeds, the ground proximity warning system sounded again. At 0214:00, the captain stated, ". . ..take it out far enough so I can get it stabilized, then turn it back in." The intracockpit conversation from 0214:49.7, until the end of the flight was as follows:

0214:49.7	
CAM- 1	now let's go gear down before landing check
0214:52.5	
CAM-2	alright gear's coming down before landing check
0215:13.8	
CAM- 1	okay can you see the runway (unintelligible word)
0215:16.6	
CAM-2	the runway's still over here
CAM-l	okay
0215: 17.4	
CAM-2	you're on a base---turn back to the left
0215: 19.4	
CAM- 1	keep callin' them out
0215:26.7	
CAM- 1	still see 'em okay that's the way I'm gunna go (questionable text)
0215:27.9	
CAM-2	uh unh I think you want to go the other way
0215:28.6	
CAM- 1	1 think you're right

0215:30.5	
	(Background noise level decreases)
0215:33.1	
CAM-?	no
0215:37.4	
CAM-2	push forward push forward
0215:38	
CAM-?	(unintelligible)
0215:40.0	
CAM-?	oh no
0215:40.5	
	(end of recording)

The recorded radar ground track of N931F is illustrated in Appendix E. The highest altitude recorded on the FDR as the aircraft was on downwind leg was approximately 3,100 feet above sea level or about 2,450 feet above the ground.

Thirteen witnesses were located who had observed the aircraft inflight, prior to the final descent into the ground. Most witnesses noted that the aircraft appeared "normal" (i.e. normal engine sounds, no fire, etc.), but low, slow or in a position not consistent with earlier observations of the Carswell AFB approach traffic. Witnesses familiar with the normal flight pattern commented that the aircraft was east of this course and on a heading or turn that would reestablish the normal course. Seven witnesses stated that the aircraft was in a turn prior to the transition to the descent into the ground.

Those witnesses positioned west through northeast of the impact site indicated that the aircraft nosed over to a vertical descent. A witness west of the accident site further stated that the aircraft appeared to reverse course slightly during the descent. A witness south of the site indicated that the flight path reversed ("jerked back") very rapidly at the transition to descent. Witnesses east through south of the site indicated that the aircraft rolled to a very steep nose down angle (approximately 70°), and was on its back at impact. The witnesses were not consistent when questioned about the direction of roll just prior to the final descent.

The accident occurred.during the hours of darkness on open pasture land. The impact site was approximately 8.3 nautical miles north of Carswell AFB and approximately 1.5 nautical miles east of the extended runway centerline for runway 17. The geographical coordinates of the impact crater are 32°54'39" North, 97°24'45" West, at an elevation of 775 feet above sea level.

1.2 Injuries to Persons

Injuries	Crew	Passengers	Others	Total
Fatal	2		0	2
Serious	0	8	0	0
Minor	0	0	0	0
None	0		0	0
Total	2	8	0	2

1.3 Damage to Airplane

The aircraft was totally destroyed during impact with the ground and the subsequent fire. The airplane was valued at $9,000,000, according to the insurance adjuster handling the claim.

1.4 Other Damage

Removal and replacement of dirt at the accident site due to environmental concerns and other associated clean-up costs were valued at $30,000.

1.5 Personnel Information

1.5.1 The Captain

The captain had been working for Evergreen Airlines since September 4, 1984. He held airline transport pilot certificate No. 375508516 with a rating for the DC-9 and commercial privileges for airplane single-engine land, issued July 3, 1985. At the time of the accident he had accumulated approximately 7,238 total flying hours, of which 1,938 were in the DC-9. He had been designated as a company check airman on the DC-9 on September 6, 1986. He had flown 3 hours 44 minutes in the preceding 24-hour period, and had 15 hours 55 minutes of crew rest prior to reporting for duty at 1845. His last proficiency check had been completed on July 18, 1988 with the notation, "[the captain] flew virtually a flawless check flight. All procedures standardized and completely correct." He had received a simulator training/check ride in lieu of an inflight proficiency check on February 1, 1989, with the notation "Excellent check ride." His last FAA first-class medical certificate had been issued on December 19, 1988, with no limitations. His last recurrent ground school had been accomplished on July 12-15, 1988.

Several pilots who had flown with the captain revealed that he was in the habit of checking the condition of all annunciator lights including the CARGO DOOR open warning light by activating the test switch on the panel during the "Before Takeoff" abbreviated checklist.

1.5.2 The First Officer

The first officer was hired on July 25, 1988. He held airline transport pilot certificate No. 2102930 with a rating for the Lear Jet and

commercial privileges for airplane single-engine land and sea, issued on April 6, 1979. At the time of the accident he had accumulated approximately 10,863 total flying hours, of which 1,213 hours were in the DC-9. He had the same flight and duty time as the captain for the preceding 24-hour period. His last proficiency check had been completed on August 26, 1988, and he completed his training with landings in the DC-9 on August 31, 1988. His last FAA first-class medical certificate had been issued on October 13, 1988, with no limitations.

1.6 Aircraft Information

1.6.1 General Aircraft Information

N931F, a McDonnell Douglas DC-9-33F, serial number 47192, was manufactured in 1968 and it was placed into passenger and freight service with Konninklijke Luchvaart Maatschappij NV (KLM) on April 17, 1968. KLM deactivated the main cargo door and modified the interior to a passenger-only configuration on February 22, 1984, per KLM maintenance order #52-118. The aircraft was sold to the partners Con-Av Corporation and Air Traffic Corporation and flown to Dothan, Alabama, on April 16, 1987, for U.S certification and registration as N35UA. In preparation for a lease agreement, the aircraft was flown to San Antonio, Texas on May 27, 1987, for reactivation of the main cargo door and return of the aircraft to a freighter configuration by the Dee Howard Company. Evergreen International Airlines, Inc. accepted the aircraft (re-registered as N931F) and assumed maintenance control on June 1, 1987.

The gross takeoff weight of the aircraft at the time of the last takeoff was calculated as follows:

Operating weight	58,603
Cargo weight	15,562
Zero fuel Weight	74,165
Fuel	12,000
Gross Takeoff weight	86,165

The center of gravity was 19.7 percent mean aerodynamic chord (MAC). The maximum allowable takeoff weight was 114,000 pounds and the maximum landing weight was 102,000 pounds. The center of gravity limits varied by weight. Below 89,000 pounds the forward limit is 5.9 percent MAC and the aft limit is 34.4 percent MAC.

1.6.2 Main Cargo Door Description and Closing Procedure

The DC-9-33F upper cargo door is on the left side of the airplane about midway between the cockpit and the wing root. The door is 136 inches long and 81 inches high. The door is hinged at the top and is opened outward and upward by the linear motion of a hydraulic actuating cylinder. The actuator is extended when the door is closed. When fully retracted by hydraulic pressure, the door will open more than 162°; however, mechanical locks are provided to hold the door in either a 162° fully raised position or an 84° "canopy" position when hydraulic pressure is removed.

When closed, the cargo door is latched and unlatched by a separate hydraulic actuating cylinder which is connected by mechanical linkage to a torque tube with seven latching hooks. When the latch actuator is extended by hydraulic pressure, the rotation of the torque tube will engage the latching hooks onto mating spools on the cargo door sill. An over center linkage arrangement will hold the latching hooks in the engaged position when hydraulic pressure is removed from the latch actuator. Positive locking is further assured by lockpins which engage the latch mechanism to prevent movement of the latching hooks to the unlatched position. The lockpins are spring loaded to the locked position and moved to the unlocked position when hydraulic pressure is applied to another hydraulic cylinder.

Both the lockpins and the latching hooks can be disengaged by mechanical linkage accessible from the outside of the door to open the door without hydraulic pressure when so desired. The lockpin linkage is connected to a lever (handle) which can be repositioned by hand and the latching hook torque tube is connected to a socket fitting in which a removable handle can be inserted. The lockpin handle and the latch fitting also function as an indication of latching hook and lockpin position when visually observed from outside of the airplane.

In addition to the door actuating cylinder, the latch cylinder and the lockpin cylinder, the major components of the cargo door hydraulic circuit in airplanes configured as N931F are an electrically operated isolation valve and a mechanically operated control valve. The operating circuit also includes a hand pump, check valves, restrictors, and relief valves. Hydraulic pressure is normally supplied by the airplane's right auxiliary electric driven hydraulic pump although the hand pump in the airplane's right wheel can also be used. In either case, electrical power is required to operate the isolation valve, which must be opened to pressurize the circuit to the door control valve. The electrical control switch for the isolation valve and the mechanical "T" handle for the door control valve are located in a covered compartment on the floor of the entryway adjacent to the main passenger door.

Evergreen Airlines procedures call for either the captain or the first officer to close the cargo door. To close the door, the hydraulic isolation valve toggle switch is first moved to electrically open the valve porting the hydraulic pressure line to the door control valve. Then, the door control valve "T" handle is lifted out of a floor mounted retainer clip, pulled upward and then turned to the door open position. This activates the auxiliary hydraulic pump to pressurize the door hydraulic system. When the door lifts off of the hold open mechanical locks, the control valve "T" handle is rotated to the door close position. Pressure is then applied to the extend side of the door actuating cylinder and the latch cylinder and the retract side of the lockpin cylinder. The door then begins to descend, its rate of movement controlled by a restriction in the hydraulic return circuit. The latching hooks are mechanically blocked in the open position until the door settles down flush with the fuselage. Then a cam pivots the mechanical block free and the pressure in the latch cylinder drives the seven latching hooks over the spools on the door sill. The crewmember operating the door then returns the control valve "T" handle to neutral. This repositions the

door control valve and deenergizes the auxiliary hydraulic pump. This action also relieves the pressure in the lockpin cylinder and the lockpins will engage the latching hooks by spring force provided that the latches are fully engaged on the mating spools. The "T" handle is returned to its stowed position and the isolation valve toggle switch is turned off. A striker assembly on the cargo door hydraulic-control panel cover ensures that this switch is pushed off when the cover is closed. The panel cover also contains a push-down block to ensure that the door control valve is in neutral and the hydraulic pump off.

The crew then observes that the external lockpin manual control handle is in the LOCK (horizontal) position and that the torque tube drive fitting, also on the outside of the cargo door, is in the LOCK (up) position. Observation of these two external indicators in the lock positions is the immediate indication to the crewmember that the cargo door is fully latched and locked. The other acceptable method of checking the latches and lock pins prior to takeoff is to directly observe them from the inside of the aircraft. On the accident flight, however, the positioning of the cargo pallets precluded the ability to use this method.

The open or closed status of the cargo door is also displayed by a cockpit warning light. The original 28 volt dc electrical circuit to illuminate the light consists of two switches wired in parallel. Both of the switches are spring loaded to the closed position. One is opened by mechanical actuation when the door lowers against the door jamb and the other is opened mechanically when the lockpin pushrod moves to a position where the lockpins are engaged in the latching hooks. Since the lockpins can engage only when the latching hooks are fully rotated over the door sill spools, an open switch indicates that the door is latched and locked. With either of the switches closed, the cockpit warning light is illuminated. When the door is properly closed, both switches open and the light is extinguished. The airplane manufacturer issued a service bulletin describing a modification to the cargo door warning circuit but the modification had not been accomplished on N931F as discussed in section 1.6.4. (See figures 1 and 2.)

1.6.3 Main Cargo Door Airworthiness Directive (AD) Compliance

On January 27, 1975, the Federal Aviation Administration issued AD 75-03-03 which was to have been accomplished within 300 hours flight time after issue and was not repetitive. It required the confirmation of the correct condition and position of a push-down spacer on the access door to the main cargo door control valve "T" handle and a check of the freedom of movement of the door control valve shaft. The Dee Howard Main Cargo Door Reactivation engineering order DC9-52-EV218-87, which was accomplished on June 8, 1987, required the installation of the access door that included a push-down spacer in the form of a phenolic block to press against the main cargo door control valve shaft when the access door was properly closed. This complied with the push-down spacer check of this AD. The control valve

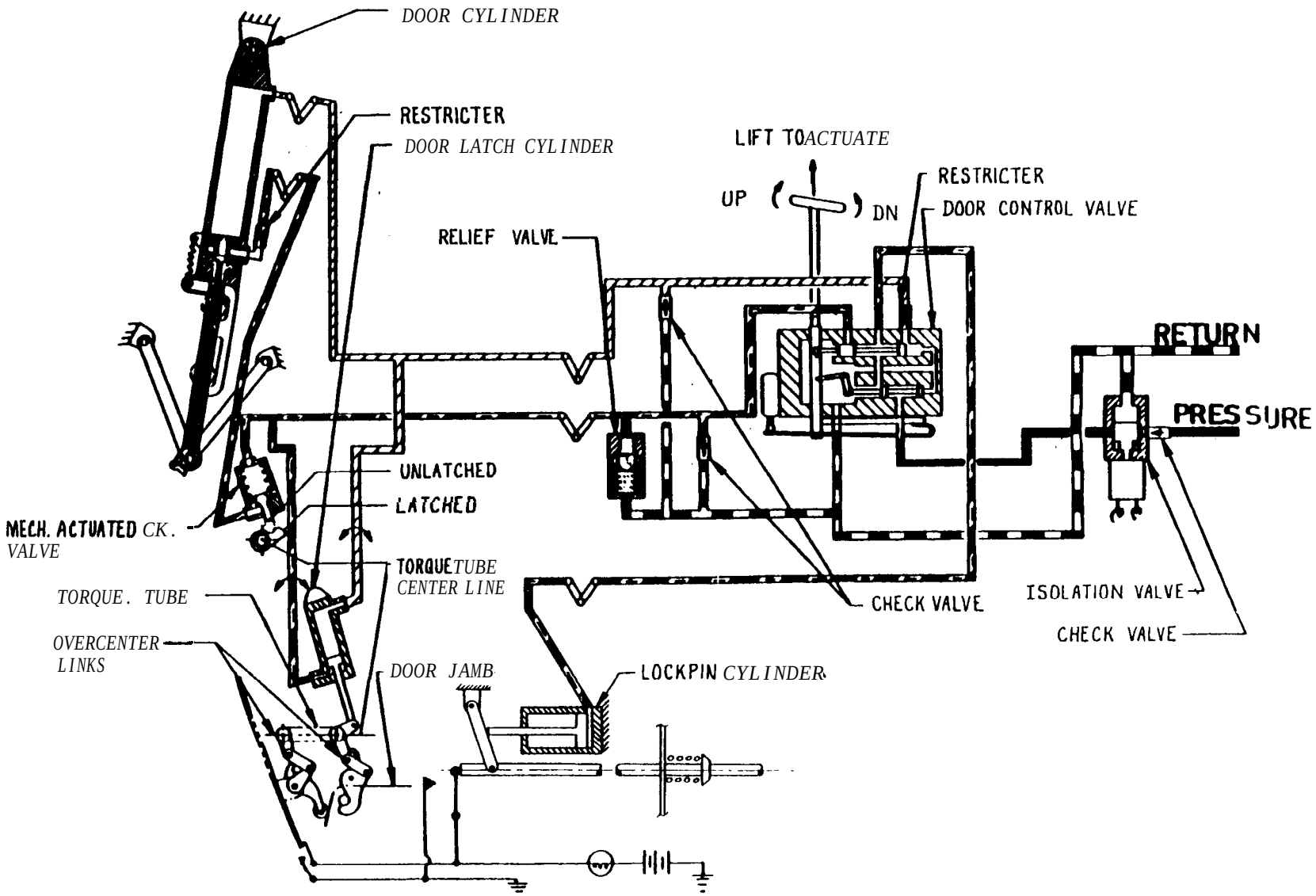

Figure I.--Hydraulic routing within the cargo door hydraulic system.

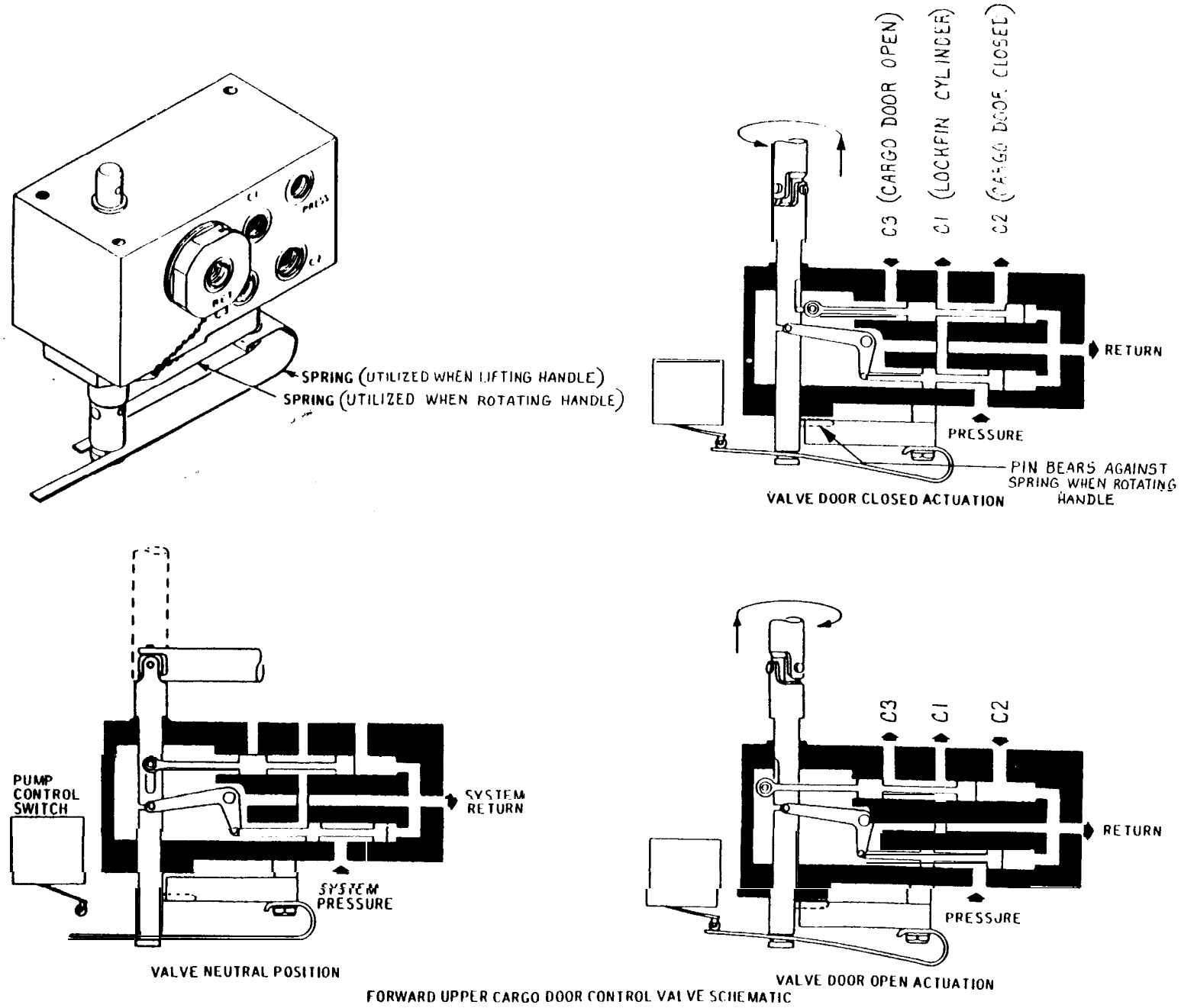

Figure 2.--Main cargo door components.

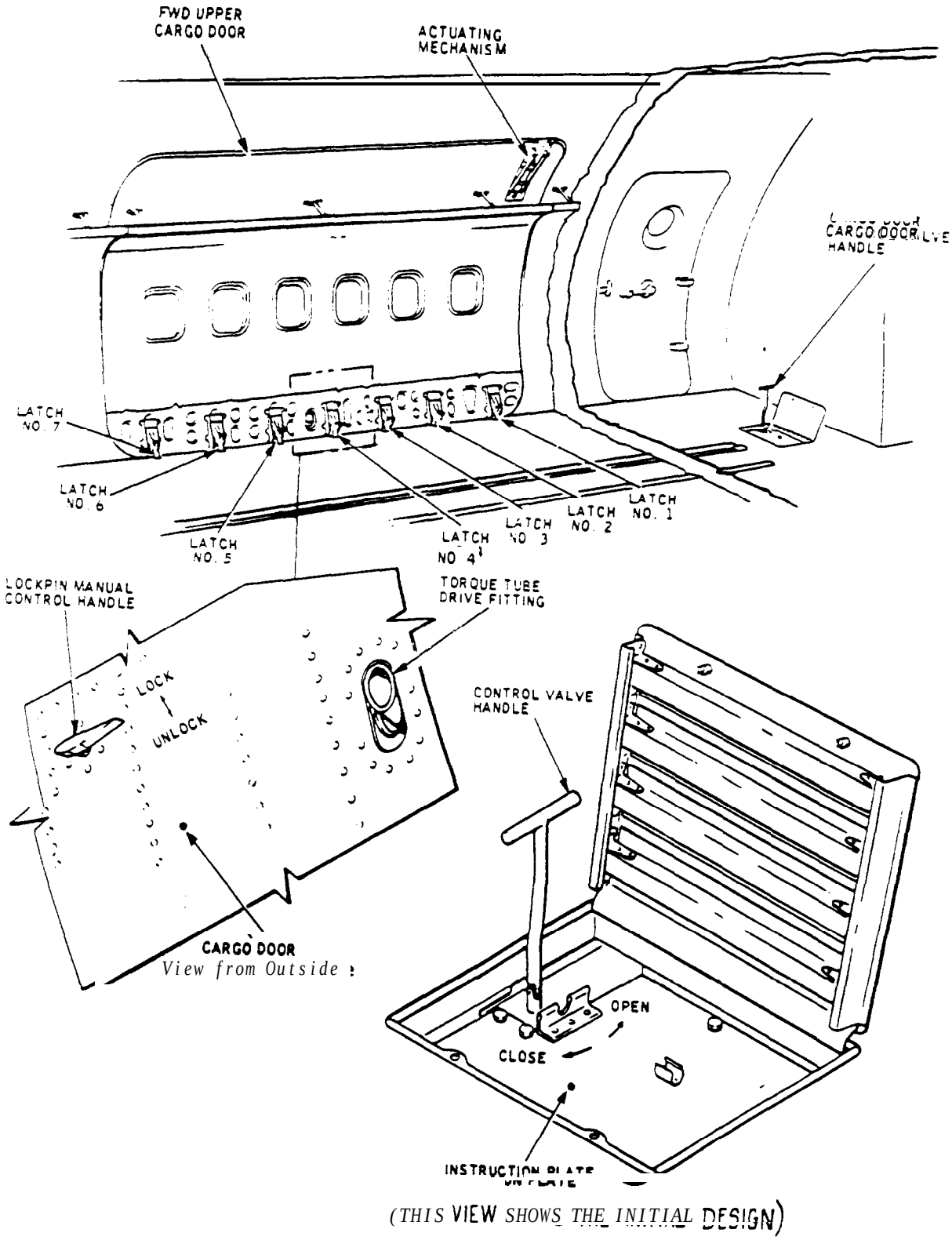

Figure 2.--(continued)

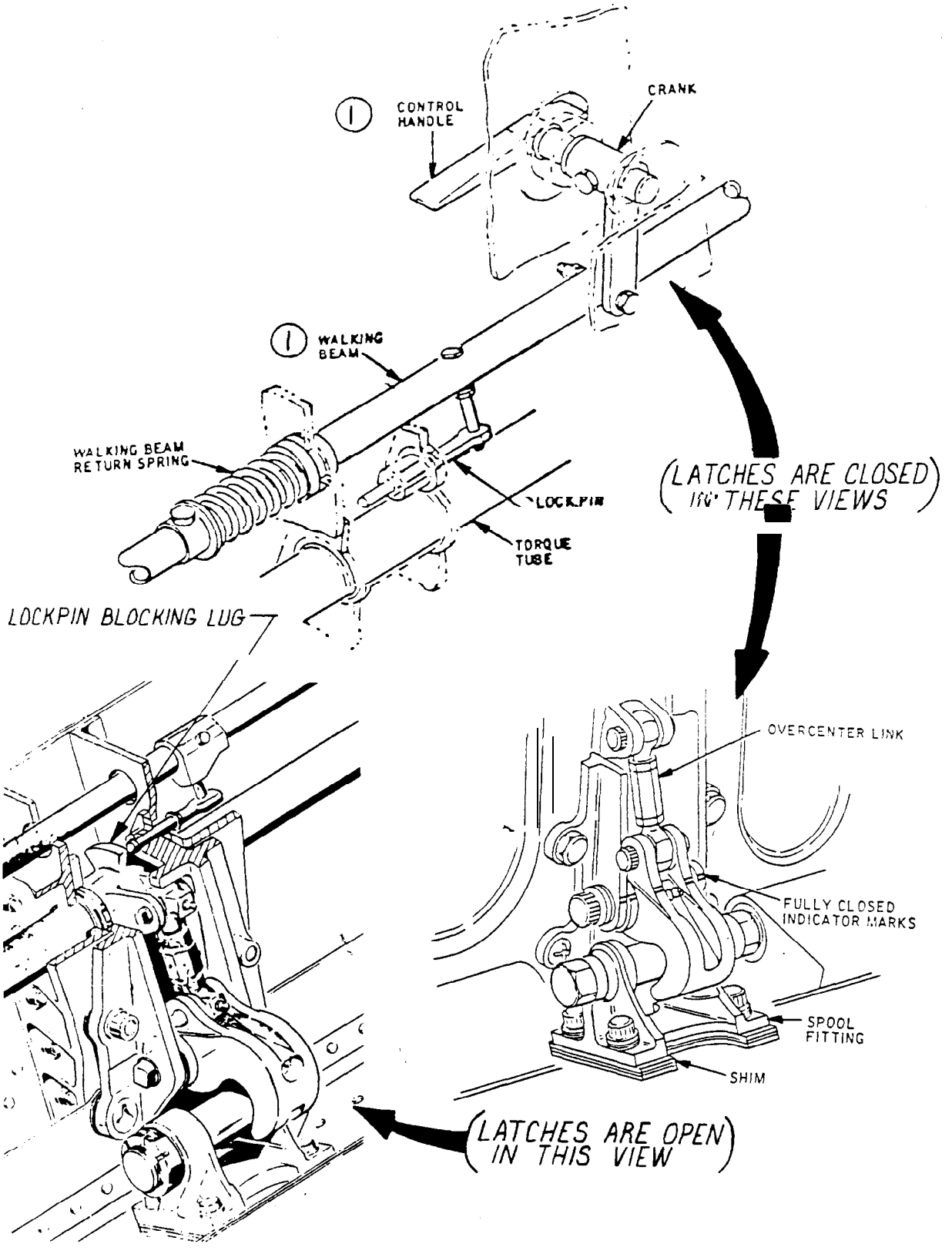

Figure 2.--(continued)

shaft freedom of movement check had been accomplished earlier by KLM on December 23, 1975, according to KLM engineering order No. 18689. No pieces of the access door or phenolic spacer were found in the wreckage.

On April 1, 1981, the FAA issued AD W-02-06 which concerned the main cargo door latch spool fitting attachment bolts. Douglas Service Bulletin (SB) 52-119, Group I (see section 1.16.4), had been approved as a means of compliance with this AD. Phase 1 of the SB provided procedures for the detection and replacement of broken bolts only, and was to have been accomplished within 12 months of issue and again 6 months later. Phase 2 of SB 52-119 was non-repetitive and required a magnetic particle inspection and replacement (if necessary) of the main cargo door latch spool fitting attaching bolts. Lubrication and sealing of the bolts and fitting was also specified. This procedure was to have been accomplished within 2 years which eliminated Phase 1, if accomplished within 1 year. KLM had records of compliance with SB 52-119, phase 2, in the form of engineering order CEO 52-33875, titled "Seal Inspection - Cargo Door Latch Spool Brackets." The date of this engineering order was July 19, 1981. A letter from KLM to Evergreen, dated April 3, 1989, stated that "this CEO covers the work as outlined in Douglas SB 52-119, Group I, Phase 2."

On September 21, 1982, the FAA issued AD 81-16-51 which was non-repetitive and required a visual inspection of the main cargo door latches and performance of a wrench check of the latch spool bolts as defined in McDonnell Douglas Alert Service Bulletin A52-130, dated August 11, 1981. KLM indicated compliance via modification order 52-113B, dated April 21, 1982, and accomplished on August 9, 1982. Evidence that these procedures were accomplished was that both the bolt heads and nuts were safety wired to the spool fittings found in the wreckage.

On November 26, 1984, the FAA issued AD 84-23-02 which required the determination of main cargo door locked status via external or internal visual inspection. The operative wording of this visual inspection is, in part:

> Commencing within the next 30 calendar days from the effective date of this AD....., a flight crew member, a mechanic, or a ramp supervisor will ensure that the main cargo door is closed, latched, and locked prior to each takeoff as follows:
>
> 1. Perform visual check of the manual latch controls, located outside the main cargo door, to ensure that the latch actuating socket handle and the lockpin handle are in the LOCK position; or
>
> 2. Perform visual check of the latches and lockpins, located on the inside of the main cargo door, to ensure that the latches are in the closed position and the lockpins are in the locked position.
>
> 3. Prior to taxi, communicate to the flight crew that the cargo door has been checked, closed, and locked.

This AD could be superseded by rewiring the two door warning switches and the installation of a dual sensing door warning system in accordance with McDonnell Douglas Service Bulletin 52-92. Evergreen had identified this work to be done, but at the time of the accident the external visual inspection method was used to comply with this directive. Evergreen personnel stated that the parts for the dual sensing door warning system were not immediately available from McDonnell Douglas. McDonnell Douglas stated that it would take around 300 days to obtain the parts.

The Evergreen DC-9 Operations Manual complied with AD 84-23-02 by describing how to properly determine if the door was locked in two areas:

First, the "Aircraft General" section described the complete door operation and second, the "Exterior Inspection" abbreviated checklist described how to determine proper locking. The "Before Start" checklist also required that a crewmember declare that he had checked the latched and locked status of the main cargo door.

According to statements obtained by Safety Board investigators, Evergreen Airlines management and crews interpreted the wording of this AD to mean that this inspection of the external lock pin manual control handle and the torque tube drive fitting (the external latching and locking indicators) on the cargo door could be accomplished while standing in the passenger entry doorway and looking aft down the side of the fuselage toward the latched and locked indicators. This interpretation was in accordance with Airworthiness Directive AD 84-23-02 and was approved by the FAA Evergreen Airlines principal operations inspector.

1.6.4 Main Cargo Door Service Bulletin (SB) Compliance

Main cargo door service bulletin compliance by KLM was affected by the deactivation of the main cargo door and installation of passenger seating in February 1984, which made compliance with non-mandatory changes to the door impractical for the duration of that configuration. All eleven service bulletins affecting the cargo door were issued prior to the deactivation of the door by KLM, but the only SBs accomplished by KLM had all been issued prior to 1976 (52-70, 52-91, and 52-119). An inspection of the main cargo door components and available written records during the accident investigation confirmed the following compliance or noncompliance of the following manufacturer's service bulletins:

a. SB 52-64 - Issued on August 1, 1968, with revision 1 on September 9, 1968 - This SB recommended rework of the main cargo door latch mechanism to prevent a failure of the cargo door to latch under conditions of fuselage/cargo door flexing due to such things as floor loads, fuel loads and the position of the nose gear. The SB called for the installation of a two-to-one mechanical advantage link on the hydraulic latch mechanism. SB 52-64 was not accomplished on N931F.

b. SB 52-65 - Issued on July 18, 1968, with revision 1 on January 10, 1969 - This SB recommended replacement of the forward upper cargo door mechanism apex pin and bushings. The pin in question could crack or fail and permit the door to fall back against the top of the fuselage in the full open position, or slam shut if in the partially open position. SB 52-65 was not accomplished on N931F.

c. SB 52-70 - Issued on January 22, 1969 - This SB recommended the rework of the main cargo door link latch operatingmechanism. It implemented a revised rigging procedure for the door latches. KLM incorporated this SB 52-70 on June 10, 1981 under maintenance order 52-058A.

d. SB 52-85 - Issued on October 12, 1973 - This SB recommended double safety wiring of the link assembly rod ends of the assembly barrel that affected the over center adjustment of the cargo door latches. SB 52-85 was not accomplished on N931F.

e. SB 52-87 - Issued on June 7, 1974 - This SB recommended modification of the cargo door latch operating mechanism by replacing the stop, cam, and roller assemblies and adding one spacer to the cargo door latch operating mechanism. This would have helped ensure correct latching and helped prevent possible damage to the the door components. SB 52-87 was not accomplished.

f. SB 52-91- -Issued on December 1, 1975, with revision 2 on August 12, 1976 - This SB modified the upper cargo door hydraulic system by the addition of a new solenoid operated isolation (shutoff) valve controlled by a manual toggle switch and equipped the cargo door hydraulic control access door with a striker assembly for that switch to provide a positive means to eliminate hydraulic pressure to the door control valve. This was intended to prevent hydraulic pressure from unlocking the door in flight. KLM incorporated SB 52-91 on June 10, 1981 under maintenance order 52-058A.

g. SB 52-92 - Issued on April 7, 1976, with revision 2 on November 21, 1985 - This SB recommended a modification of the original cargo door cockpit warning light system electrical circuit and the addition of a redundant independently energized warning light and circuit.

The SB modification eliminates an undesirable failure mode of the original cargo door cockpit warning light system wherein a failure of either the door jamb switch or the lockpin switch to close will remain undetected and the cockpit warning light will appear to function

normally; that is, the light would illuminate when the other functional switch closes and extinguish when it opens. Thus, if the lockpin switch is the one failed, the door will appear safe when closed even though it is not fully latched and locked. The modification to the existing circuit consists of adding a relay which must be energized with 28 volts dc to extinguish the cockpit warning light. The door jamb and lockpin switches are rewired in a series circuit so that electrical continuity through both switches will energize the relay. With the logic of the switches inverted and placed in series instead of parallel, a failure of either switch to close will result in an illuminated warning light.

The addition of the independent circuit and a new test switch to verify the functional status of the warning lights provided sufficient confidence to permit termination of the requirement for the exterior visual check described in AD 84-83-02 upon compliance of this SB. The SB had not been accomplished on N931F.

h. SB 52-93 - Issued on June 30, 1975, with revision 1 on May 3, 1978 - This SB recommended the installation of a lockpin viewing window on upper forward cargo door. This small viewing window would have been used to view a color-coded lockpin to determine latch hook status from the outside of the airplane. This SB was not accomplished.

i. SB 52-100 - Issued on September 30, 1976 - This SB recommended the installation of a forward upper cargo door vent system, due to the fact that on several occasions it was thought that post-takeoff aircraft pressurization had caused the door to open in flight. The vent door, on the lower portion of the cargo door, would be mechanically linked to the door locking mechanism. The vent door would not close unless the latch hooks were fully engaged and the lock pins were in place. Aircraft pressurization, in this case, would not be possible in the event of an incompletely latched and locked door. In addition, when the vent door is closed, the latch assembly torque tube and the lockpin walking beam movement is 'mechanically blocked. This would prevent actuation of these devices in the event of malfunctioning hydraulic valves. SB 52-100 had not been accomplished on N931F.

j. SB 52-119 - Issued on October 28, 1980, with revision 1 on January' 30, 1981 - This SB recommended the inspection/replacement of forward upper cargo door latch spool fitting attachment bolts. This SB incorporated two phases: 1) procedures to detect broken bolts securing

the spool fittings to the aircraft structure and, 2) inspect/replace all bolts and reseal the fitting assembly. Phase 2 eliminated the need for further action on this SB. Previously mentioned AD 81-02-06 cited this SB as a method of compliance. KLM records indicated compliance on July 19, 1981. This SB superseded Alert SB 52-115 that consisted of basically the same requirements.

k. SB 52-130 - Issued on April 23, 1987, with revision 1 on November 11, 1987 - This SB recommended the replacement of upper cargo door latch spool bolts and modification or replacement of latch spool fitting assemblies. It replaced the latch spool bolts and either, 1) installed bolt retainers, nuts with safety wire provisions, and new spool fittings or, 2) modified the existing fittings to accept the new bolt, retainer and safety wire application. Alert SB A52-130 preceding this SB recommended a safety wire procedure on existing hardware and was approved for compliance with AD 81-16-51. Inspection of the spool assemblies on N931F after the accident showed that the Alert SB procedures were in place, but the hardware modifications called for in this SB had not been accomplished.

1.6.5 Main Cargo Door Maintenance Discrepencies

An examination of past discrepencies related to the main cargo door on N931F revealed that on August 23, 1988, the door had failed to open and the No. 6 lockpin was replaced. In addition, the 84° door open position (the intermediate or "canopy" position) locks required repetitive work through 1988. A review of the main cargo door hydraulic system maintenance documentation indicated a repetitive write-up of system leaks that involved the door area. The main cargo door solenoid (isolation) valve had an 0 ring replaced in August 1987. Subsequent hydraulic leaks in the door area in December 1987, were remedied by tightening numerous fittings and finally replacing the hydraulic door latch actuating cylinder. The last hydraulic discrepancy was remedied by tightening a final hydraulic line fitting. Miscellaneous main cargo door discrepancies involved a loose "gill" liner and a "DOOR OPEN" warning light on takeoff in May of 1988. The warning system was checked, foreign objects in a "lock roller" assembly [probably a latch spool assembly] were cleared, and the system then worked normally. No other details of this discrepancy could be found.

1.7 Meteorological Information

The weather observation taken at Carswell AFB at 0821 UTC was: a 25,000 thin broken cloud base with a visibility of 10 miles, the temperature was 66°F., the winds were out of 320° at 6 knots, and the altimeter setting was 30.01" Hg. A wind. shift of 150° occurred prior to the flight. National Weather Service upper air data indicated that above the ground winds were

from a westerly direction and increased in speed to about 16 knots at 4,000 feet.

1.8 Aids to Navigation

Following the accident the Carswell AFB localizer transmitter was operationally checked with no anomalies noted. The flightcrew of N931F had set in the localizer frequency and localizer final approach course for runway 17 at Carswell, according to their comments on the cockpit voice recording beginning at 0212:39. Also, according to the CVR comments, they were not using the localizer to navigate to the runway.

1.9 Communications

No communications problems between N931F and the Carswell ground and local controllers occurred during the ground operations, taxi, takeoff and initial portion of the flight. At 0212:12 however, the first officer asked the local controller if the flight was cleared to land and received no response. He attempted to contact the local controller three more times, and the Carswell approach controller two times, to no avail. His last radio transmission was an "in the blind" call announcing the flight's landing intentions and desire to have emergency equipment standing by. The transmissions were recorded on the CVR cockpit area microphone, but were not received by the air traffic control facility.

On one previous door opening incident involving a DC-9 airplane the door had opened far enough to damage a communications antenna located along the centerline of the fuselage. This incident is described in section 1.17.2. Damage to N931F by the impact forces precluded a positive determination of whether the antenna had been damaged by the open cargo door.

1.10 Aerodrome Information

Carswell AFB is located approximately 6 statute miles west of Fort Worth, Texas, at an elevation of 650 feet above sea level. Runway 17-35 is 12,000 feet long and 300 feet wide, with approximately 1,000 feet of overrun at each end. The surface is concrete and asphaltic concrete, with partial grooving between 1,500 and 4,300 feet from the south end of the runway. There are high intensity runway lights with a standard approach light system and sequenced flashing lights for runway 35. There is a lake at the north end of the runway. Runway 17 has runway end identifier lights, and visual approach slope indicator lights are installed at both ends. Air traffic control is provided by a military tower.

1.11 Flight Recorders

1.11.1 The Flight Data Recorder

The flight data recorder, a Sundstrand UFDR, recorded altitude, airspeed, heading, vertical acceleration and microphone keying in digital format on 1/4 inch magnetic tape. The armored enclosure inside the UFDR showed evidence of internal damage. As a result, the magnetic tape was

nearly severed in places, and splicing was required. The damaged area of the tape was in the location of the latest data for the accident flight. All parameters, with the exception of vertical acceleration, were sampled once per second. Vertical acceleration was sampled 12 times a second. The source for the airspeed and altitude data was the rudder limiter pitot-static system, with the pitot tube located in the vertical stabilizer and the alternate static port located below the cargo door. The values recorded for vertical acceleration, during the accident and previous flights, were found to be invalid. The values oscillated between .8797 and 1.091 G's, with almost no intermediate values. The reason for these anomalies could not be determined.

There were a number of synchronization losses on the recording, two of which occurred after the start of the takeoff roll. The first was an unexplained loss of 3.55 seconds of data beginning at 0211:38, about the time the airplane turned downwind. The second was a loss of data beginning at 0215:35 (in the vicinity of the damaged sections of tape) and lasting about 5 seconds until impact with the ground.

The airspeed and altitude traces both showed numerous excursions beginning immediately after lift off and continuing until the end of the data recording. Many of the excursions in airspeed and altitude taken singularly or in combination exceeded the physical performance capability of the airplane. The flight recorder heading data showed that the airplane completed a 180° turn to the right while climbing to about 3,000 feet msl after takeoff. As the heading stabilized at the completion of the turn, the recorded indicated airspeed decreased from about 221 knots to 194 knots in about a 5 second period. Concurrently, the recorded altitude decreased from 2,982 feet msl to 2,464 feet msl. The data show that the airplane maintained a nearly constant heading for about 2 1/2 minutes and thence entered a slow turn to the right. After completing about 84° of turn, the airplane's heading change rate increased significantly. At the same time, both the airspeed and altitude recorded increased about 35 knots and 450 feet respectively over a 7 second period. The flight data recorder lost synchronization 3 seconds later. The changes in airspeed and altitude caused by the movement of the open cargo door would also have been displayed to the crew on the airspeed indicators and altimeters during the accident flight.

1.11.2 The Cockpit Voice Recorder

The cockpit voice recorder, a Sundstrand Model AV557-B, recorded intracockpit conversation between the captain and first officer between 0142:36 and 0215:40.5. About 13 minutes and 27 seconds of nonpertinent, casual conversation were not transcribed for this report. This conversation occurred while the crew was in the cockpit awaiting the completion of cargo loading.

An increased background sound level was noted on the CVR recording beginning at 0209:49 (three seconds after the first officer called rotate) and ending at 0215:30.5 (ten seconds prior to the end of the recording). The sound level after 0215:30.5 was approximately one-half as loud as it was during the majority of the flight.

An attempt was made to utilize a sound spectrum analysis of the CVR tape to determine engine blade passing frequency and thus an approximation of engine speed during the flight. This effort was unsuccessful because of the background noise.

1.11.3 Recorded Air Traffic Control Radar Data

The data recorded by the Fort Worth Air Route Traffic Control Center radar during the time of the accident flight was obtained and the recorded positions of N931F were extracted. The first radar (transponder) return was received as the airplane passed abeam the departure end of the runway with an encoded altitude of 1,300 feet msl. Twenty-six returns were received; the final return was received about 34 seconds before the flight data recorder stopped and showed an encoded altitude of 2,700 feet msl at a position about 1.5 nm west of the crash site.

A reconstruction of the airplane's flight path using flight recorder data and ATC radar data is described in section 1.16.3.

1.12 Wreckage and Impact Information

1.12.1 General Wreckage Distribution

The main impact crater location was at an elevation of 775 feet above sea level. The position of aircraft fragments within the main impact crater indicated that N931F had struck the ground in an inverted, nose down, left wing low attitude on a magnetic heading of 140°. The crater created by the fuselage measured 4.5 feet deep and approximately 30 feet in diameter. The groundscar of the wing impact measured approximately 101 feet in length. The wingspan of an intact DC-9-33F is 93 feet 4 inches.

Helicopter and ground searches of the flight ground track produced no aircraft components. The total wreckage debris field was confined to an area measuring approximately 450 feet wide and 845 feet in length. The fragmented airplane pieces that did not remain within the initial impact crater had been propelled in a fan pattern forward from the crater and in the direction of flight. An area of burned grassland located 2,600 feet from the main impact crater contained burned pieces of aircraft insulation only and no metal fragments.

1.12.2 General Component Damage

The left and right wings and the wing center section were completely fragmented with many of the fragments exhibiting post-crash fire damage. A large section of the left and right wing lower skin was found forward of the impact crater. All leading edge slat actuators on the wings were found in the fully extended position. The position of the trailing edge flaps at impact could not be confirmed from the physical evidence available. Three of the four flap actuators were found in the fully retracted position and the fourth was found in a position that would indicate 25° flap extension. All flap actuators were detached from their support structures during the impact sequence.

The left elevator was found complete and attached to a portion of the stabilizer rear spar by one hinge. The right elevator was separated from its stabilizer and found in four separate pieces. The left elevator inboard tab was broken in half and the outboard tab was attached to its elevator by only the inboard hinge. The right elevator inboard and outboard tabs were found completely separated from their elevator. The rudder was complete and attached to the rear spar of the vertical stabilizer. The rudder trim tab was separated from the rudder. The rudder trim setting could not be determined.

Because of the extensive fragmentation of the aircraft, the integrity of the flight control cable system before impact could not be determined. Nearly all bellcranks, pulleys and other attaching/routing devices were broken or separated from their attachment structure. All broken control cables that were examined exhibited tension-type failures.

The right engine, a Pratt and Whitney JT8D-9A, exhibited moderate impact damage. The blades of the front stages of the compressor were bent severely opposite to the direction of operating rotation. The left engine, also a P&W JT8D-9A, experienced heavy damage upon impact. It was examined more closely because on a previous DC-9 cargo door opening, foreign objects (door liner fragments, cargo compartment debris, etc.) had been ingested by the engine. In this previous instance, no loss of power occurred, however. The only evidence of foreign object ingestion in the combustor section of the left engine on N931F was a small amount of mud in the swirl vanes of the fuel nozzle. There was no evidence of foreign material trapped in the outer shroud of the combustor dome. A few light splatters of impinged metal were found on the combustion chamber outlet duct. In addition, all first and second stage compressor blade stubs (the blades were broken off) on the left engine were bent opposite the direction of operating rotation. Similar damage existed in deeper stages of the compressor, although several fan blades did remain attached. These too, were bent in the direction opposite to rotation.

1.12.3 Main Cargo Door and Associated Component Damage

The main cargo door was found separated from its fuselage attachment structure. The largest piece recovered was the lower portion of the door. It was fractured longitudinally below the window belt line. This portion of the door included the door locking mechanism along the lower edge of the door. The forward lower corner of this door sustained impact damage. Other recovered pieces of the door system included about 75 percent of the door upper hinge installation, the hydraulic door actuating cylinder, and numerous hydraulic components associated with the door. Discussion of the various cargo door components in this report will use the component nomenclature found in the McDonnell Douglas DC-9 Maintenance Manual to the extent possible. Adjectives have been added to certain component names in the interest of clarity. Note however, that on occasion, this company document and other documents identify the same component by two different names.

The seven hook-shaped door latch assemblies along the lower edge of the door on the latch assembly torque tube were intact and none of the latch assembly surfaces showed excessive wear or deformed areas. All seven were found in the unlatched position on the torque tube. The forward (No. 1) latch assembly was displaced aft about 18 inches. The No. 2 latch assembly was displaced aft about 7 inches.

The door latch hydraulic actuating cylinder was found attached to the latch assembly torque tube with its upper end separated from its attachment bracket. The hydraulic lines to this actuating cylinder were broken.

The lockpin walking beam was intact and in place within the door and appeared to have received very little, if any, axial aft impact movement. The aft lockpin spring was found attached to the walking beam. This walking beam and the latch assembly torque tube were not free to move because of impact damage to the corner of the door. The lockpin actuating cylinder was found extended 1/2 inch from the support assembly.

The latch assembly torque tube cam that operates the hydraulic sequence valve was found rotated to the full open position. The sequence valve was intact and attached to the door. The valve plunger could be manually operated by hand. The lockpin cylinder actuating lever at the forward end of the door was broken from its attaching structure.

The external cargo door latch assembly torque tube drive fitting was in the unlocked position. The external lockpin manual control handle was in the door unlock position also. There was about 1/8 inch of play in the handle as it was found in the wreckage.

Six of the seven lockpins were found in the door in the unlocked position (i.e. not inserted in the latch assemblies). The No. 4 lockpin was not recovered in the wreckage.

The cargo door hydraulic actuating cylinder was found separated from the door and fuselage attaching structure. The actuating cylinder measured 6 3/8 inches between the piston rod end bolt hole centerline and the face of the cylinder housing. This measurement corresponds to a door open position of approximately 160°. The designed full open position of this door is 162°.

The cargo door control valve was found attached to the door control panel. The control valve "T" handle had sheared off and was not recovered. The isolation valve switch was damaged from impact and the guard cover was also not recovered. Neither the door to the control valve compartment nor any of its components were recovered. The operating instructions placard was still attached to the control panel of the compartment.

The cargo door latch limit switch (one of two door/door jamb switches of the door opening warning system) located in the proximity of the aft end of the lockpin walking beam was in its installed position. The walking beam was not in contact with the switch arm, indicating that the

walking beam and associated lockpins were in an unlocked position. The electrical female connector of the limit switch was found separated from the switch. The connector was deformed and exhibited evidence of corrosion.

The cargo door jam limit switch (the other switch in the door warning system) was not found in the wreckage of N931F.

Five complete latch spool assemblies (in latch positions 2, 3, 5, 6 and 7) were recovered in relatively undamaged conditions. The surfaces of the spools were smooth. The #1 latch spool was not recovered and the No. 4 spool assembly was found, but the spool and bolt were missing.

1.13 Medical and Pathological Information

No evidence of adverse medical histories or chronic or acute ailments for either pilot was discovered during the course of the investigation. According to fellow pilots, both were in good health at the time of the accident. The extreme impact damage to the bodies of both pilots precluded toxicological testing and useful information from autopsies.

1.14 Fire

A post-impact fire destroyed many aircraft components that were in the fuselage impact crater. An exact ignition source could not be determined. Burning insulation from the aircraft travelled a short distance and started a small grass fire away from the primary debris field. Almost all fires completely extinguished themselves prior to the arrival of firefighting equipment. One witness out of the approximate 16 that saw the aircraft in flight believed he saw some type of fire in flight. No evidence of inflight fire was discovered within the wreckage.

1.15 Survival Aspects

Due to the total lack of survivable space within the cockpit and the forces involved in the impact, this accident was nonsurvivable.

1.16 Tests and Research

1.16.1 Cargo Door Hydraulic Component Tests

1.16.1.1 General

All of the main cargo door hydraulic components recovered from the wreckage were tested or disassembled to determine their operating capability. No identifiable components of the hydraulic power controls within the cockpit were located. The following hydraulic/electrical components associated with the main cargo door were examined and found to have been free from anomalies which would have precluded them from operating to their design specifications:

1. The cargo door control valve - This valve was found in the "valve neutral" position (as opposed to the "door open" or the "door closed" position) within the wreckage. Damage to the valve did not allow testing in the "door open' or "door closed" positions. The valve was disassembled at its manufacturer's facility and no anomalies were found. See Figure 1 for a cut-away diagram of this valve in its three operating positions.

2. The main cargo door actuating cylinder - The actuating cylinder was functionally tested and the piston moved freely throughout its normal range. The seals were tight and no leakage was noted during the bench test.

3. The sequence valve - The valve tested normally.

4. The right return line hydraulic filters - The filters were tested on the flow bench and were found to be fully functional. The differential pressure checked normal.

5. The latch actuating cylinder - The operation of the actuating cylinder was normal with no leakage noted.

6. The external lockpin manual control handle - The handle assembly was removed from the cargo door and disassembled with no discrepancies noted.

1.16.1.2 Isolation Valve

The cargo door hydraulic isolation valve was added to the system by SB 52-91. The purpose is to provide a positive means of eliminating hydraulic pressure to the control valve thus precluding the inadvertent opening of the door as a result of a malfunction or improper positioning of the control valve. The isolation valve is a solenoid operated shut off valve having three ports; inlet from system pressure, outlet to the door control valve, and a port to system return. The valve functions so that electrical power to the solenoid will open a hydraulic flow path from pressure inlet to outlet. When power is removed from the solenoid, the outlet port is blocked. The return port provides a flow path for valve leakage when the valve is in the closed position thus preventing a pressure build up at the outlet port. The nominal bypass flow from the inlet port to the return port when the valve is closed is 0.5 to 1 gallon per minute (gpm) with 3,000 psi applied at the inlet port.

When tested following the accident, the isolation valve from N931F had a bypass leakage flow of 1.33 to 1.5 gpm. Since this was higher than the nominal, the valve was disassembled. It was found that a spring which serves to hold a seal in place at the pressure port was missing thus accounting for the higher-than-normal pressure to return bypass leakage.

Although the missing spring had no effect on the valve's outlet port shut off function, there was concern that the leakage flow could result in higher-than-normal back pressure in the door control system return lines. Further, the hydraulic system design is such that the extend side of the lockpin cylinder is open to system return when the door control valve is in its neutral position. Therefore, a high return system back pressure could conceivably act against the lockpin spring load to release the lockpins. This back pressure would, at the same time, act on the extend side of the latch cylinder, tending to keep the latching hooks engaged with the door sill spools.

To determine whether the higher-than-normal bypass leakage could disengage the lockpins, the isolation valve was reassembled in its as found condition and installed in another airplane. The effect of the bypass flow on the door system was examined under a variety of the most severe hydraulic system demand conditions. In no case was movement of the lockpins noted.

To further verify the pressure shut off function of the isolation valve, the cargo door control valve was repositioned to open and the door mechanism observed. These tests were conducted under static conditions and high-speed taxi conditions with cabin pressurization loads. In no case was any movement of the cargo door lock or latch mechanisms noted.

1.16.1.3 Lockpin Actuating Cylinder

Following the accident, the lockpin actuating cylinder piston was found to be binding within the barrel of the cylinder. The crank had struck both the rod end and the actuator mounting bracket during the impact sequence. The piston appeared to have been fully retracted. The unit was functionally tested and the piston did extend when hydraulic pressure was applied. Upon disassembly, it appeared that impact with the bracket had knocked the piston slightly off center, causing the binding.

1.16.1.4 Cargo Door Latch/Lock Limit Switch

The cargo door latch limit switch/wire/cannon plug assembly was wired into the door warning system in the original configuration without the benefit of SB 52-92 improvements. The original configuration called for this switch and the door jamb limit switch to be connected in parallel to the MAIN CARGO DOOR open warning light on the annunciator panel in the cockpit. See figure 3. The female connector to this switch was damaged and a small amount of corrosion on the connector was evident. The unit was x-rayed and disassembled. The L-lever of the switch would not fully depress the micro-switch plunger of the assembly and electrical continuity could not be established.

1.16.1.5 External Lockpin Control Handle Markings

The "LOCK/UNLOCK" bar marking for the external lockpin manual control handle was not painted on the aircraft in accordance with recommended McDonnell Douglas specifications. The McDonnell Douglas drawing of this marking (drawing number 7910868) indicates that the upper bar of the marking

should be parallel to the longitudinal axis of the fuselage and pointed to the pivot point of the control handle, so that when the control handle is in the LOCK position it is in line with this upper bar of the marking. The lower bar of the marking should also point to the pivot point of the control handle, so that when the handle is in the UNLOCK position it is in line with the lower bar of the marking. There should be a 16 1/2 degree spread between the bars of the marking to coincide with the 16 1/2 degree handle movement required to manually lock or unlock the door.

On N931F, the bar marking was found painted on the door so that when the control handle was in the open position (as found in the wreckage) it indicated somewhere in between the upper and lower bars of the marking. The handle, in fact, appeared to be pointing closer to the LOCK bar marking than to the UNLOCK bar marking. The spread between the bars on N931F was about 16 1/2 degrees and the upper bar of the marking was applied correctly, but the lower bar of the marking was shifted down and forward and did not direct itself to the pivot point of the control handle. Refer to figure 4, a photograph of the marking as applied to N931F. Both the lockpin manual control handle and the cargo door surface surrounding the handle were painted dark green. The bar marking and the "LOCK/UNLOCK" wording were painted white.

The markings on the outside of the main cargo door concerning the torque tube drive socket fitting are two horizontal arrows enclosing the words "LOCK" and "UNLOCK" and an arrow enclosing the word "OPEN" pointing down. The horizontal arrows point to the two possible positions of the torque tube drive fitting that is used to manually latch and unlatch the door latches from the latch spools in the door sill. These markings were applied to the cargo door of N931F in accordance with the McDonnell Douglas drawing. The fitting itself was painted dark green. McDonnell Douglas does not recommend specific paint colors for any markings on the main cargo door.

1.16.2 Other Airplane Component Tests

1. The rudder actuator - The actuator was tested and found to function normally. There was some internal leakage, but it was within limits. Based on the measurement of the rod end extension on the rudder power cylinder, the position of the rudder at the time of impact was 4.1°, plus or minus 1° to the left.

2. The master caution, light assembly was the only annunciator light that could be identified within the wreckage. Although the colored light cover was relatively intact, a disassembly revealed that the bulb envelope and filament had been crushed from the rear, yielding no indication of the preimpact status of the bulb.

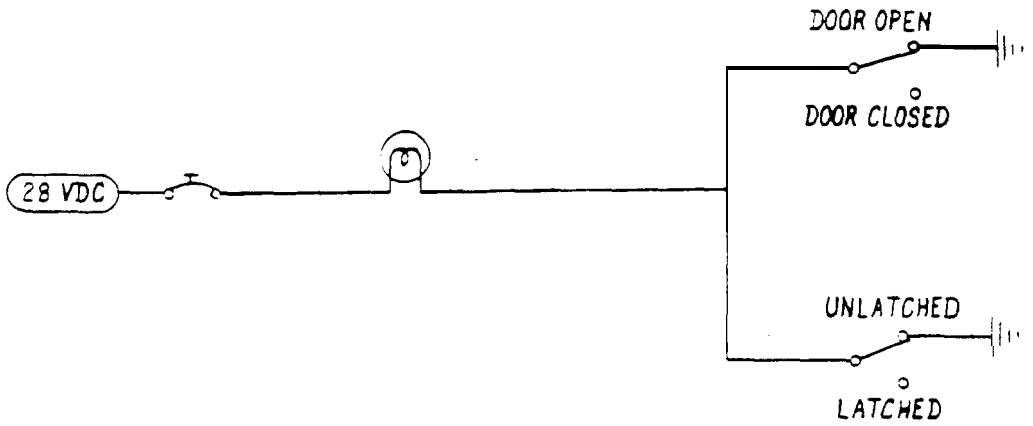

ORIGINAL CIRCUIT (DE-ENERGIZED TO EXTINGUISH WARNING LIGHT)

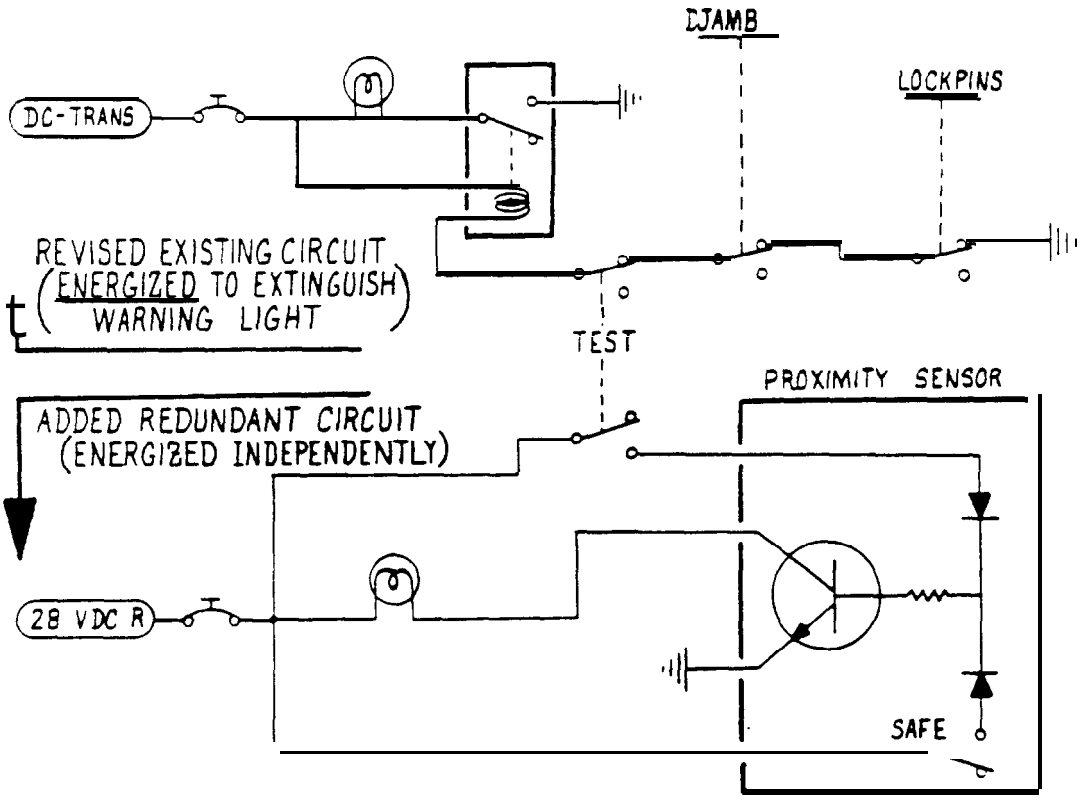

CARGO DOOR WARNI PER S/B 52-92
(SCHEMATIC DIAGRAM)

Figure 3. --Cargo door warning switch electrical diagrams.

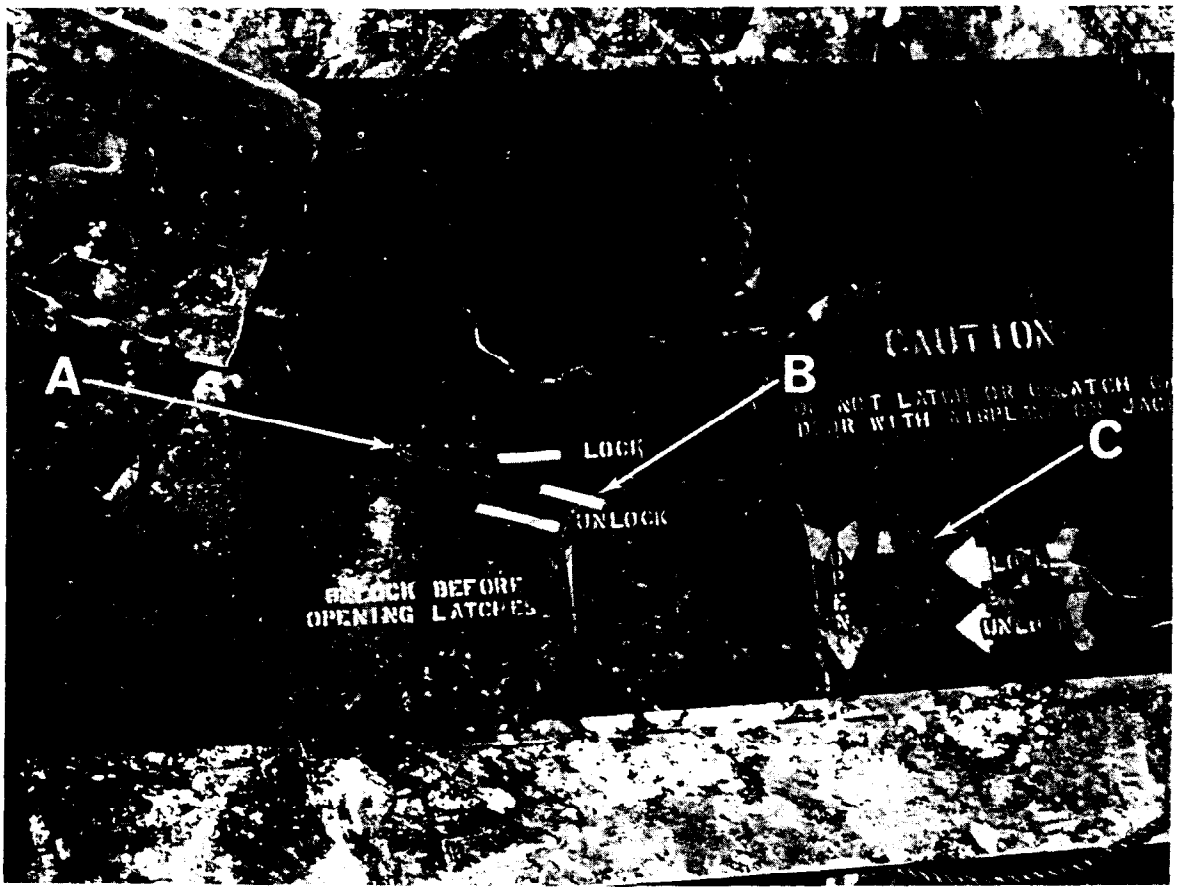

Figure 4. --Photograph of cargo door markings on N931F. *Arrow 'A' points to, and is at the same angle as the* lockpin *manual control handle. Arrow 'B' points to a mark applied to the photograph indicating the correct location of the "UNLOCK" control handle marking. Arrow 'C' points to the torque tube drive fitting in the "UNLOCK" position.*

3. The engine pressure ratio (EPR) transmitters were recovered and examined at their manufacturer. This examination revealed that the left transmitter indicated 2.0 to 2.1 EPR at impact and the right transmitter indicated 2.1 to 2.2 EPR at impact.

1.16.3 Correlation of Flight Recorder and ATC Radar Data

The heading and airspeed values that were recorded on the flight data recorder (FDR) were used to plot the airplane's position over the ground for the duration of the flight. National Weather Service upper air winds were applied to establish the airplane's track; the winds varied from 350° at 6 knots at the surface to 265° at 16 knots at 3,000 feet msl. The resulting flight track deviated significantly from the airplane's position as determined from the Fort Worth ARTCC radar returns. While the FDR headings yielded a track which closely corresponded with the radar data during the time that the airplane was stabilized on the downwind leg, the distance that the airplane travelled on the northerly heading did not correspond.

In examining possible reasons for this discrepancy, the Safety Board considered the significance of the airspeed and altitude excursions noted on the FDR. The FDR airspeed is a result of the total pressure measured by the pitot tube in the leading edge of the airplane's vertical fin and the static pressure measured at the alternate static port directly below the cargo door. An open cargo door could influence the pressure measurement at either of these locations. However, the simultaneous variations in airspeed and altitude as the airplane was stabilized on the downwind leg and again as the airplane progressed into the turn to final approach could be explained only by static source error.

In the first excursion, the recorded airspeed decreased 27 knots and altitude decreased 518 feet in a 5 second period. Both of these changes are consistent with a 0.6 in hg increase in pressure measured at the static port assuming that the total pressure measured at the pitot tube inlet remains unchanged. Although there continued to be periodic fluctuations of the measured airspeed values, there was no subsequent indication of a significant or prolonged change in measured static system pressure until that change evident in the final turn. Consequently, the Safety Board again plotted the flight track based on FDR data, but with an assumed airspeed correction for static pressure error between the two major excursions on the FDR airspeed and altitude traces. The correction added 20 knots to the average airspeed recorded during the period. After applying this correction, the FDR ground track plot corresponded closely with the ATC radar position plot. The comparison is shown in Appendix E. As noted earlier, many of the excursions in FDR airspeed and altitude valves exceeded the physical performance capability of the airplane. Such excursions are present in the final seconds of the FDR data. Therefore, to preclude the use of unrealistic data, flight track calculations were halted at 2015:30, about 10 seconds before the airplane impacted the ground.

1.16.4 Airplane Performance

The Safety Board and the McDonnell Douglas Company examined the effect of an open cargo door on the handling qualities of a DC-g-30 airplane. The effect was assumed to be most pronounced when the door is fully opened so that a large area is above the fuselage. Since the door opens upward from the left side of the airplane, it probably would assume the fully open position when the airplane is in a left sideslip (right yaw) wherein the airload on the door would prevent its closure. It was estimated that under such conditions, the door would produce an aerodynamic force equivalent to that which would be produced by a flat plate 11 feet long by 7 feet high. Since the resultant aerodynamic force is above and forward of the airplane's center of gravity, it would cause a right rolling moment and right yawing moment, the magnitude of which would increase with increasing sideslip.

The McDonnell Douglas Company indicated that lateral and directional control forces attainable from aileron, spoiler, and rudder deflections are sufficient to counter the aerodynamic forces from the door and that the airplane would retain positive directional stability characteristics even with adverse rudder deflections in sideslip angles up to about 15° left. However, they also noted that the directional stability would be reduced about 25 percent and that the lateral stability would also be reduced. Available data indicated that the lateral stability would be similar to that which would be experienced with a load factor of 1.4 (that which would be attained in a level turn with a 45° bank angle).

The effect of the reduced directional and lateral stability would be a tendency for the airplane to yaw and roll with lower control forces than normally used by the pilot.

1.17 Additional Information

1.17.1 Hazardous Cargo/Cargo Loading

There were two shipments of hazardous materials on board N931F at the time of the accident; one shipment of class A explosives and one of non-flammable compressed gas (nitrogen). The class A explosives consisted of 32 Mark 54 fuzes (intended for Mark 54 five hundred pound conventional bombs). They were loaded onto the aircraft at Carswell and the compressed gas bottles were loaded onboard at Kelly AFB. The total weight of the fuzes was 31 pounds and the weight of the gas bottles was 13.2 pounds. Other cargo on the aircraft consisted of electronic circuit cards, turbine engine fan blade sets, camera equipment and assorted valves. The total weight of the cargo and palleting was manifested at 15,562 pounds.

The cargo onboard at the time of the accident was loaded in accordance with then-current Department of Transportation, Department of Defense and Air Force Logistics Command directives and regulations according to USAF cargo loading personnel associated with this investigation. One waiver referencing DOT exemption E-7573 applied to this cargo shipment. This waiver allowed the explosives to be shipped by air (contrary to basic DOT

regulations) but prohibited other USAF bases in the route from shipping materials incompatible with explosives during this cargo flight.

All 11 of the bomb fuze containers holding the 32 fuzes were located within the wreckage by Air Force Explosive Ordinance Disposal (EOD) technicians shortly after the accident. All the fuzes within the containers were accounted for and ten of the containers were transported to the Carswell AFB munitions range and destroyed. The eleventh container was left at the scene because, in the opinion of the lead EOD technician, all the explosive material in the container had been consumed by the post-crash fire. The two gas bottles were also located intact and removed by the Air Force EOD team.

No evidence of damage of an explosive nature was located within the wreckage.

1.17.2 Other Instances of Cargo Door Openings

A review of available records from McDonnell Douglas indicated that main cargo doors on DC-9 and DC-8 freighter and freighter-converted airplanes have opened in flight 23 times since 1968. Eighteen of these incidents occurred on DC-8s and five occurred on DC-9s. In three of the DC-8 incidents the cargo doors were not manufactured by McDonnell Douglas, but rather by other vendors under FAA supplementary type certificates. The cargo door mechanism is essentially the same for both models of aircraft. None of the previously reported door openings resulted in an aircraft crash. According to McDonnell Douglas records, the main cargo door has never opened in flight on airplanes enhanced by the mechanical provisions of SB 52-92 (the dual CARGO DOOR OPEN warning light system) or SB 52-100 (the cargo door vent system). Circumstances surrounding most of these incidents could not be located because of the dissolution of the airlines involved, an inability to locate appropriate crewmembers, and a general lack of recorded information about the incidents. Two documented cases of cargo doors opening in flight are summarized here.

Following departure from Houston, Texas, on May 22, 1971, in a DC-9 operated by Texas International Airlines and converted back to passenger service by deactivating the cargo door, the captain stated that "the door let go." This occurred at an altitude of about 8,000 feet with a cabin pressure differential of 2.5 psi. He stated that assorted loose objects in the passenger cabin were sucked overboard, the cockpit door was ripped off its hinges, and the entire tail of the aircraft was shaking aft of the open cargo door. He slowed the aircraft to below 250 knots and attempted a left turn, but the aircraft "felt like it didn't want to go [left]." He then made a right turn and reported normal control feel and power responses. He noted that the door had gone "up over the top" of the fuselage far enough to damage a radio antenna located on the fuselage centerline. The door lowered somewhat as the airspeed decreased and eventually settled into a position 18 to 24 inches above the door sill. He stated that he flew the landing approach at airspeeds appropriate for the gross weight and flap settings. His first officer stated that only gradual and gentle turns in both directions were used during the approach. None of the 65 passengers onboard at the time were seriously injured during this incident. The reason the door

opened in flight could not be determined from available records or the interviews with the pilots.

The Safety Board obtained the 5 parameter metal foil type flight data recorder from the airplane following this incident. It was noted that the airplane's indicated airspeed was about 250 knots when the normal acceleration began to fluctuate abnormally providing evidence that the cargo door opened. At the same time the recorded airspeed suddenly decreased to 222 knots. The recorded airspeed then rose slightly to 226 knots before again decreasing to 192 knots. The airspeed again increased to 220 knots after which it continued to fluctuate erratically for the remainder of the flight. Similar fluctuations were not evident however in the recorded altitude values.

On January 20, 1968, an Overseas National Airways freighter configured DC-9-32F experienced an inadvertent cargo door opening upon rotation for takeoff from Warner-Robbins AFB, Georgia. The crew compared the initial flight control reaction and response to that of having an engine out. The captain said that when he began a turn to the right the nose of the aircraft tucked and the roll seemed to go very easily, which made him apprehensive. He stated that during a left turn with about 6-8° of bank that the nose tuck was not as noticeable. The aircraft was always controllable without excessive exertion, according to this captain. He went on to say that a vibration increased with an increase in airspeed and when the flaps were lowered on final approach. He flew a wider than normal pattern for the final landing. His first officer stated that the door initially went to the 84° or "canopy" position then went fully open. The door angle appeared to change during turns. According to the crew, the mechanism associated with the external lockpin manual control handle was "bent," causing the door to indicate latched and locked when it actually was not.

1.17.3 Ground Proximity Warning System

N931F was equipped with an early model ground proximity warning system (GPWS) that incorporates a mode which provides a warning of excessive rate of descent with respect to terrain. The logic for the warning is based on height above the ground as measured by the airplane's radio altimeter and sink rate as measured by the change in the barometric altimeter static pressure source. The static pressure for GPWS logic is measured at the static port located aft and below the cargo door. The warning is activated when a sink rate of about 5,000 feet per minute or more is sensed and the airplane is within about 2,500 feet of the ground. As distance above the ground is decreased, the activating sink rate is decreased.

On two occasions during the flight a GPWS "whoop whoop terrain" warning was recorded on the airplane's CVR; the first occurred about 10 seconds after lift off and the second occurred concurrently with the excursions in recorded airspeed and altitude values as the airplane was leveled on the northerly downwind heading.

1.17.4 Corrective Actions

1.17.4.1 Evergreen International Airlines

Immediately following the accident Evergreen International Airlines issued a Fleet Campaign Directive directing a one-time inspection and operational check of the main cargo doors and door related systems on their seven remaining DC-9 cargo configured aircraft. This directive was accomplished by March 20, 1989.

On March 21, 1989, Evergreen Airlines issued Engineering Order 52-DC9-744-89, emphasizing and clarifying the ground and flightcrew inspection procedures outlined in FAA Airworthiness Directive 84-23-02. Specifically, this order addressed the exact inspection method desired by Evergreen, added a logbook entry requirement following door closure prior to takeoff, and created a training document to assure that the inspection procedures were fully understood by ground and flightcrews. The order stated that the external lockpin manual control handle and the torque tube drive fitting must be inspected from the ground, rather than from the passenger door entryway prior to takeoff to insure that the door is latched and locked.

1.17.4.2 McDonnell Douglas Corporation

On June 14, 1989, McDonnell Douglas issued an All Operators Letter recommending that the main cargo door warning system, the door operating system and the door placards and markings be checked more frequently and specified the intervals when these items should be examined.

On August 10, 1989, McDonnell Douglas issued an All Operators Letter establishing a Flight Crew Operating Manual procedure to be followed by crews if they experience an open cargo door after takeoff. The title of this checklist is "Cargo Door Opens After Takeoff" and the procedural steps and note are as follows:

Directional Control.....Maintain
Landing Gear.....Up
Flaps & Slats.....15°/EXT

NOTE

Experience has shown that the "Cargo Door Open" light will come on followed by a loud sound of rushing air. An immediate yaw to the right will be experienced which may require almost full rudder and aileron input to correct. Once the door reaches the full open position, control characteristics appear to improve. Return to the runway should be accomplished with coordinated turns using very little bank (less than 20°) and with speed appropriate to the flap/slat position.

On Approach,

Flaps.....25°/EXT
IAS.....ESTABLISH

Reduce to normal approach speed using normal wind additives

1.17.4.3 The Federal Aviation Administration

On May 4, 1989, the FAA issued Airworthiness Directive 89-11-02. This directive, termed an interim action by the FAA, mandated inspection and replacement of the main cargo door hydraulic control valve if required, inspection and modification of the control panel access door if required, visual inspection of the main cargo door from the ground to ensure the door is locked prior to each takeoff, inspection and modification of the exterior markings on the door, and functional checks of the door-open indicating system. These items generally paralleled recommendations that McDonnell Douglas had been making to operators through All Operator Letters and Service Bulletins dating back to 1974 and previously issued FAA directives concerning these subjects.

Since the issuance of AD 89-11-02, the FAA further reviewed the DC-9 main cargo door, including the main cargo door design, prior incidents of inadvertent opening of the door in flight, maintenance of the door, operational aspects of the door, all available service information, and the need to provide terminating action for the initial and repetitive inspections/checks required by AD 89-11-02. Based on this review, the FAA determined that additional mandatory corrective actions were necessary to ensure that the DC-9 main cargo door will be properly closed, latched, and locked prior to takeoff and will not inadvertently open in flight. Accordingly, on November 28, 1989, AD 89-11-02 was modified to include the items listed here. The effective date of the revision was January 13, 1990.

1. Require installation of a main cargo door hydraulic isolation valve in accordance with SB 52-91.

2. Require modification of the basic door-open indicating system in accordance with SB 52-92.

3. Require installation of an additional door-open indicating circuit in accordance with SB 52-92.

4. Require installation of a main cargo door lockpin viewing window in accordance with SB 52-93.

5. Require installation of a main cargo door indicating system test circuit in accordance with SB 52-92.

6. Require modification of the main cargo door latch operating mechanism in accordance with SBs 52-70 and 52-83.

7. Require installation of a main cargo door vent system in accordance with SB 52-100 and the additional installation of a vent door-open indicating system to warn the crew when the vent door is not fully latched.

8. Require installation of a main cargo door hinge pin retainer to ensure retention of the hinge pin in the event of its failure.

2. ANALYSIS

2.1 General

Both aircrew members were off-duty for 15 hours prior to the beginning of their duty day. There was no evidence from the CVR recording or acquaintance interviews to suggest that the crew was overly tired or psychologically unable to perform their duties. No evidence of adverse medical histories or acute or chronic ailments was discovered for either crewmember and both were reportedly in good health prior to the accident.

With the exception of the interpretation of FAA Airworthiness Directive 84-23-02 concerning visual examination of the cargo door latch and lock indicators, Evergreen International Airlines' initial and recurrent training appeared to be adequate. Both crewmembers were experienced in the DC-9 and flew the aircraft in accordance with the Evergreen Airlines Operations Manual. The majority of the ground and flight checklist items, including those pertaining to the inflight emergency, were performed in accordance with good operating procedures. The crew's activity during the majority of the inflight emergency demonstrated good management of crew resources.

With certain exceptions related to the main cargo door noted in later sections of this analysis, the airplane was certificated, equipped, and maintained in accordance with FAA regulations and company policies and procedures. All aircraft subsystems not related to the cargo door appeared to operate as designed throughout the flight. The inability of the crew to communicate with the tower controllers on the VHF radio on downwind leg was probably the result of the open cargo door striking the upper antenna for that radio. There was no evidence that debris from the cargo compartment was ingested into either engine following the door opening. Also, the disassembled engine pressure ratio transmitters and characteristic fan blade bending damage revealed that both engines were at high power settings at impact.

The ceiling and visibility on the morning of this accident did not contribute significantly to the accident sequence. Nighttime visual meteorological conditions existed. About 9 minutes prior to brake release the tower was recording winds out of 187°. The local controller gave the crew winds out of 300° at takeoff. Winds were recorded as having been out of 337° about 3 minutes after impact. The wind speed on the surface was never greater than ten knots. The winds in the general area were from the west at approximately 16 knots at 3,000 feet msl. Although the wind affected the

airplane's track over the ground as it progressed downwind and entered the turn to final approach, windshear and turbulence were not factors in the accident.

The Safety Board considered the analysis of this accident to involve two major issues. First, the reason that the cargo door opened upon takeoff had to be determined. Thus, the Board examined the possible contributions of the bypassing isolation valve, the malfunctioning latch limit switch, the mismarked external latch and lock indicators, and the aircrew's probable response to these items during this investigation.

Second, the reason that the crew lost control of the airplane during the final turn had to be examined, in light of the fact that other DC-9 crews had also experienced an open cargo door but had safely landed the airplanes. Elements considered regarding this loss of control included crew distraction because of the open door, the aerodynamic effect of an open cargo door, and a lack of manufacturer's guidance to aircrews on what to do when a door opens in flight.

The history of airborne openings of the cargo doors on the DC-9 and the DC-8 (23 prior occurrences, 5 of which were DC-9 airplanes) and the adequacy of measures taken by the manufacturer, the FAA and the airline to prevent such occurrences were also examined.

2.2 Inflight Opening of the Cargo Door

The evidence provided by the flightcrew's intracockpit conversation and background noises on the CVR clearly show that the cargo door opened at or immediately after the airplane was rotated for takeoff. The background noise which began 3 seconds after the first officer's "rotate" callout was undoubtedly caused by airflow disturbance in the vicinity of the door. The GPWS warning which occurred 8 seconds later is explained by a static pressure increase which would have been consistent with a rapid descent of the airplane. Coincident with the GPWS warning, the flight data recorder shows an 80 foot loss of altitude in a 1 second period and a 20 knot loss of airspeed in a 2 second period. The increment of aerodynamic drag associated with the open door and the resulting sideslip could not have produced an airplane performance decrement consistent with these excursions. Thus, the Safety Board concludes that those changes also were attributed to an airflow disturbance in the vicinity of the static pressure port which produced an increase in local pressure. About 9 seconds later, an increase is noted in both altitude and airspeed, 80 feet and 13 knots in 1 second. The Safety Board believes that these and the subsequent variations in recorded altitude and airspeed values were partially or totally the result of changes in local pressure at the static port produced by movement of the cargo door. Further, the most extreme changes occurred as the airplane entered or leveled out of a turn. The hypothesis that the variations in recorded airspeed and altitude values were a function of door position is supported by the statement of other flightcrews who have experienced a cargo door opening in flight to the effect that the door changed position as the airplane was maneuvered.

The Safety Board considered the possibility that the cargo door was properly latched and locked by the first officer after the airplane was loaded and that a system malfunction resulted in a subsequent movement of the lockpins and latches.

The only electrical connections to the cargo door control valve are those associated with the auxiliary hydraulic pump circuits. The valve itself is totally mechanical in operation. Consequently, there are no electrical circuit anomalies that could have directly effected an uncommanded unlocking, unlatching or opening of the cargo door.

The isolation valve which functions to isolate hydraulic fluid pressure from the door control valve is electrically operated. Thus an electrical circuit malfunction or an inadvertent mispositioning of the on/off toggle switch could cause the valve to remain open after the door was closed. There was no evidence that such occurred on the accident flight. However, had the isolation valve remained open, the door control valve would also have had to have been mispositioned to the door open position or to have functioned abnormally to have effected movement of the cargo door mechanisms. The door control valve was found after the accident in the neutral position. Further, the airplane's records show that AD 75-03-03 which required the installation of a phenolic spacer on the access door for the door control valve had been accomplished. The spacer would have assured that the valve was neutral when the access door was closed. While the door and spacer were not found in the wreckage there were no maintenance entries to indicate that the door and spacer were removed or missing. With the door control valve in the neutral position, only abnormal hydraulic leakage past the lands of two separate valve spools could have caused the door to unlock and unlatch. Although the postaccident condition of the door control valve precluded a functional flow test, a disassembly of the valve disclosed no anomalies that would have affected its operation. The Safety Board therefore does not think it is likely that a mispositioned "open" isolation valve combined with a malfunctioning door control valve caused the door to open after it was closed and locked.

The isolation valve, however, was functionally flow tested and did not meet the specified bypass leakage criteria. The leakage flow from the pressure inlet port to the system return port was found to have been excessive when the valve was in the isolation (closed) position. The flow was attributed to a missing spring which was supposed to retain a seal in the pressure port. The missing spring did not affect the isolation function of the valve. However, investigators were concerned that the higher than normal bypass flow could have caused sufficient back pressure in the door hydraulic circuit return lines to unlock the lockpins. Tests conducted subsequent to the accident indicated that the maximum return system pressure caused by the bypass flow combined with other hydraulic system demands would not have produced movement of the lockpins. Moreover, even had the lockpins fully disengaged as a result of excessive back pressure, the door should have remained latched since the same return line pressure would provide a force to keep the latching hooks engaged. Thus, the Safety Board concludes that the missing spring from the isolation valve was not a factor in the accident.

Since it is unlikely that the cargo door opened as a result of a system malfunction after having been closed properly, the Safety Board examined other factors that could have resulted in a departure with an unlocked and unlatched door.

The design of the DC-9-33F upper cargo door and its control system is such that the person closing the door does not have to take special actions to move the latching hooks or lockpins into place. The closing, latching and locking are all accomplished sequentially when the isolation valve toggle switch is moved to "on" and the door control valve "T" handle is pulled, rotated and held in the "close" position. The handle must be held in the "close" position until the door is closed and the latching hooks have moved into place over the door sill spools. The lockpins will then be forced by spring load into engagement. If the door control valve handle is released back to neutral when the door settles flush with the fuselage but before the latching hooks are fully rotated over the spools, hydraulic pressure will be blocked at the valve and the sequence will cease. The door will remain unlatched or partially latched and the lockpins will not engage the latching hooks. The operator has no direct indication from the door control panel that this has occurred. It is therefore necessary for the operator to assure that the latching and locking sequence has been completed by observing the positions of the latching hooks and lockpins from inside of the door or observing the corresponding positions of the torque tube drive fitting and lockpin handle from the outside.

The FAA's AD 84-23-02 requires that a flight crewmember, a mechanic, or a ramp supervisor verify that the cargo door is closed, latched, and locked by such a visual check prior to each takeoff. Evergreen Airlines complied with the AD but permitted the crewmember to view the torque tube drive fitting and lockpin handle while standing in the passenger entry doorway without exiting the airplane.

Although the markings for the torque tube drive fitting were correctly applied to N931F, the Safety Board believes that the position of the fitting would be difficult to discern from the passenger door entryway. When the door is latched, the end of the drive fitting is flush with the skin of the door; when unlatched, the fitting protrudes about one inch from the door surface. However, the drive socket fitting was green in color without contrast to the airplane and, even when protruding, would have been hard to see at night in a poorly lighted area. The Safety Board believes that the Evergreen flightcrews probably relied on the lockpin handle to ascertain the locked and latched status of the door.

The markings for the external lockpin manual control handle consist of bar marks and the words "LOCK" and "UNLOCK," as previously described. As found in the wreckage, the lockpin manual control handle was physically in the unlocked position and all mechanical linkages and components of the lockpin system, including the lockpins themselves were also in the unlocked position. Upon observation of the handle and associated markings on the cargo door following the accident, however, the handle appeared to point closer to the "LOCKED" than the "UNLOCKED" chevron arm marking. Because the Safety Board believes that the handle did not move appreciably after impact,

it is reasonable to assume that the first officer would have perceived that the lockpin *system was in a locked condition following observation of the handle and markings on* N931F. *Note also that the operative portion (the handle) of this indicating system was painted green against a green background. Lastly, the angular displacement of the handle between the locked and unlocked position is only 16* 1/2°. *Even when correctly marked, the Safety Board believes that the position of the handle would have been difficult to discern accurately at night from the passenger door entryway. In accordance with AD* 89-11-2, *visual inspection is now to be accomplished from the ground.*

The Safety Board concludes that the main cargo door was not latched or locked by the first officer because he did not hold the door control valve "T" *handle in the closed position long enough, as previously explained. Following his attempt to close the door, the Safety Board believes that the first officer then observed the position of the lock pin manual control handle and saw that the handle was pointed more toward the "LOCKED" than the "UNLOCKED" chevron. Because of this observation, the first officer believed the cargo door was latched and locked. The* lockpin *manual control handle position also apparently deceived the maintenance technician who later stated that it was in the horizontal position and the door was flush with the fuselage as the crew taxied away from the cargo loading area. Because the markings surrounding the handle were misaligned to the point of deception, the Safety Board believes that Evergreen's failure to properly align the markings contributed directly to the accident sequence.* It *could not be determined if the first officer observed the torque tube drive fitting, but given the size and color of this device, it is doubtful.*

The Safety Board notes that immediately following the accident, Evergreen Airlines began requiring their crews to observe the external latched and locked indicators from the ground rather than the passenger door entryway. Evergreen also immediately remeasured and reapplied the manual lockpin *handle markings on all Evergreen DC-9s to conform with the actual handle movement. The Board also notes that the FAA promulgated an Airworthiness Directive mandating actions as already established by Evergreen within less than 2 months following the accident.*

The Safety Board also believes that flightcrews rely significantly on the cockpit door open warning light to provide assurance that the cargo door is closed, latched and locked. On flight 931, *the flight crew routinely verified that the warning light was extinguished after the door was closed as part of the "After Start" abbreviated checklist. Unfortunately, the originally designed electrical circuit for the DC* 9-33F *cargo door warning light was not a fail obvious design. The circuit consisted of two switches; one sensed the position of the door against the door sill and the other sensed the position of the lockpins. The switches were wired in a parallel circuit; both were spring loaded to the "closed" position to complete a 28VDC circuit illuminating the cockpit light when the door was unlocked and open. Normally, when the door closed against the sill, one of the switches would be opened mechanically, but the light would remain illuminated until the* lockpins *were in place and the second switch was opened.*

Subsequent to the accident, it was found that the terminals on the connector to the lockpin switch were corroded and that the activating lever on the switch was damaged so that the branch of the parallel circuit remained open irrespective of the lockpin position. This was a poor design in that the malfunction of the lockpin switch would not have been apparent to the flightcrew or maintenance personnel because the cockpit light would continue to illuminate when the door was opened and extinguish when the door was closed as would be expected. The crew thus had no way of knowing from the light that the door was not fully latched and locked. The Safety Board therefore concludes that the door warning light circuit design contributed to the accident.

The McDonnell Douglas Company recognized this design shortcoming and issued Service Bulletin 52-92 in 1976. The Service Bulletin modified the original design by adding a relay which reversed the open/close logic of the door jamb and lockpin switches permitting a series rather than parallel circuit. In the new design, an open failure of either switch will result in an illuminated cockpit light, an indication of an unsafe condition. Additionally, a redundant circuit with a second cockpit light was added. Had N931F been so modified, the flightcrew would have known that the circuit was malfunctioning or that the door was not properly locked. Company procedures would have required that the crew could not have departed until the situation was corrected. The Safety Board therefore concludes that the FAA's failure to issue an Airworthiness Directive mandating the SB was a contributing factor in the accident. Previous incidents of DC-9 airplanes departing with unlocked doors should have alerted the FAA to the significance of the SB.

Also in 1976, the McDonnell Douglas Company issued SB 52-100 which added a cargo door vent system mechanically connected to the lockpin system. The vent doors would have provided another positive indication that the lockpins were not in place before flight 931's departure and would have prevented the pressurization of the airplane had the crew departed. There have been no inadvertent openings of cargo doors on DC-9 airplanes modified to SB 52-92 or 52-100. The Safety Board believes that the FAA should have required compliance with both of these SB's, and its failure to do so contributed to this accident.

2.3 Loss of Airplane Control

There is little data available regarding the performance characteristics of a DC-9-33F with the upper cargo door open in flight. Although the Safety Board considered the possibility of conducting wind tunnel tests following this accident, neither a wind tunnel facility nor an appropriate model were readily available and the cost of such tests was considered to be prohibitive. Further, the Safety Board believes that the modifications to the airplane and improved procedures mandated since this accident should probably prevent further inflight cargo door openings on DC-9 airplanes.

Although there were no tests to examine the flight characteristics of the airplane, previous occurrences of inflight cargo door openings and theoretical aerodynamic analyses show that the airplane can be controlled

with an open door. However, the airloads on the door will produce an aerodynamic force that will adversely affect the airplane's directional and lateral stability. The effect will be most pronounced when the door opens fully so that a significant area is in the airstream above the airplane's fuselage. The statements of flightcrews who have successfully landed their airplanes following an inflight opening of the door confirm that an unrestrained door will change position as the airplane is maneuvered and that the flying qualities of the airplane vary with the door position. The crew of an Overseas National Airways freighter said that, during a turn to the right, the airplane tended to roll very easily and the nose tended to "tuck." The Safety Board believes that these observations are accurate reflections of the aerodynamic instabilities associated with an open cargo door. It is most likely that an airload will act on the inside of the door as the airplane is banked into a right turn and that a left sideslip would develop causing the door to assume an 'over the top" position. When in this position, the aerodynamic force from the airloads acting on the inside surface of the open door would be forward and above the airplane's center of gravity causing a right yawing moment and right rolling moment. In combination with a bank to the right, the yawing moment would be sensed by the pilot as a tucking of the airplane's nose.

The Safety Board believes that the cargo door was not latched when the airplane began the takeoff roll and that it opened fully as a result of airloads imposed during the takeoff rotation. This was evident by an almost immediate increase in the background noise recorded on the CVR and the disturbance of both the airspeed and altitude values recorded on the FDR. It is likely that the aerodynamic force on the fully open door produced the right yaw and rolling moments that led to the heading change apparent immediately after liftoff. The crew managed to retain control of the airplane and continued the climb to about 2,500 feet msl when they began an approximate standard rate turn (3°/sec) to the right. The recorded airspeed remained relatively stable during the turn. The Safety Board believes that the door remained fully or nearly fully open during this period and that the effect of the airflow on the static ports was minimal.

As the airplane leveled out on the northerly downwind heading, the door probably lowered to a nearly closed position where it created a significant pressure disturbance at the static ports, apparent as a 27 knot decrease in recorded airspeed and a 518 foot decrease in recorded altitude, and a buffeting of the air in the cargo compartment evident by an increase in CVR background noise. This assumption explains the captain's question to the first officer, "would you say that door is opened or closed." In any event, there is no indication that the crew had a difficult time controlling the airplane while on the downwind leg.

The radar track showed that the airplane drifted slightly to the east on the downwind leg and that the captain maintained the northerly heading until the airplane was about 5 nm beyond the point abeam the runway threshold. The captain at that time would have had a difficult time maintaining positional awareness with respect to the runway. When about 5 nm north of the airport the captain began a shallow turn to the right. The combination of the effect of the westerly wind and the shallowness of the

turn resulted in the airplane's crossing the extended runway centerline after completing only 90° of the turn to final.

The Safety Board believes it likely that, at this point, neither pilot was totally aware of the position of the airplane relative to the runway threshold and that the captain, in an effort to regain sight of the runway attempted to tighten the right turn. In doing so, the air load on the door probably caused it to rapidly move to its full open over the top position. This movement would account for the reverse excursions of the recorded airspeed and altitude values (35 knot airspeed and 450 feet altitude) and the concurrent decrease in background noise heard on the CVR.

A sudden opening of the door would also have produced an unexpected change in the airplane's yawing and rolling moments. The Safety Board believes that the captain may have been partially disoriented while looking outside for the runway lights in the darkness without a perceptible horizon reference; that he may not have sensed the increasing roll and nose tuck that would have occurred when the door opened and that he thus failed to correct the airplane's changing attitude until a critical bank angle and loss of altitude had occurred and impact was inevitable.

Because the aerodynamic effect of a sudden movement of the cargo door to the fully open position while in a turn and the captain's ability to correct for the resulting yawing and rolling moments could not be verified by wind tunnel or simulator tests, the Safety Board could not determine the precise cause for the loss of control that led to the airplane's descent to impact.

The Safety Board is concerned that at the time of the accident, neither McDonnell Douglas nor the FAA had recommended a written emergency procedure for an open cargo door in flight. This was true in spite of the fact that cargo doors on DC-9s and DC-8s had come open in flight many times prior to this fatal accident. Records of these previous door openings, although sketchy, were available, and should have prompted much earlier action. Consequently, the Safety Board believes that this lack of prompt action contributed to the accident.

Since the accident, McDonnell Douglas issued the previously described Flight Crew Operating Manual procedure for an open cargo door. The Safety Board believes the crew actions described in this procedure are appropriate for this type of inflight emergency and that the FAA should consider requiring the inclusion of the procedure in the FAA-approved flight manual.

3. CONCLUSIONS

3.1 Findings

1. The flightcrew was trained and qualified in accordance with current company and Federal requirements.

2. Of the 11 McDonnell Douglas Service Bulletins concerning the main cargo door, only 3 were accomplished on N931F by KLM prior to door deactivation in 1976.

3. Evergreen International Airlines acquired the aircraft in June 1987 and did not accomplish any more SBs prior to the accident.

4. All Airworthiness Directives, including one concerning a push-down spacer for the door control valve, and the addition of a hydraulic isolation valve, were accomplished by KLM and Evergreen Airlines.

5. Evergreen and the FAA interpreted the Airworthiness Directives on visual inspection of the cargo door latched and locked indicators to mean that this inspection could be accomplished from the passenger door entryway.

6. Had the service bulletins been accomplished recommending an additional door open warning system and warning light rewiring, a lockpin viewing window, and the addition of a door vent system the crew would better have been able to detect the open door.

7. One of two door open warning light switches was malfunctioning and because of their wiring, this malfunction made the entire door warning system ineffective.

8. The external markings for the cargo door external lockpin manual control handle were applied to the door incorrectly.

9. During preflight preparations the first officer probably did not complete the door closing cycle by failing to hold the door control handle to the closed position long enough to complete the cycle.

10. The first officer misinterpreted the external lockpin manual control handle position to mean that the door was locked as a result of the incorrect markings.

11. Because of the wiring and malfunction in the door warning light system, the captain believed the cargo door was latched and locked.

12. Upon takeoff, the main cargo door opened.

13. At the time of the accident, DC-9 aircrews were provided no emergency procedure or other guidance to aid them in event of a cargo door opening in flight.

14. Inflight openings of main cargo doors on DC-9s and DC-8s have occurred at least 23 times previously and the airplanes were all landed successfully. Five of these involved DC-9 airplanes.

15. Although the DC9-33F has sufficient control authority to counter the aerodynamic forces produced by an open cargo door, the flying qualities of the airplane are affected by reduced yaw and roll stability.

16. A sudden movement of the cargo door to the fully open over the top position will result in increased roll and yawing moments which, if not countered by flight controls, can cause the airplane to attain an attitude from which recovery may not be possible without significant altitude loss.

3.2 Probable Cause

The National Transportation Safety Board determines that the probable cause of this accident was the loss of control of the airplane for undetermined reasons following the inflight opening of the improperly latched cargo door.

Contributing to the accident were inadequate procedures used by Evergreen Airlines and approved by the FAA for preflight verification of cargo door security, Evergreen's failure to mark properly the airplane's external cargo door lockpin manual control handle, and the failure of McDonnell Douglas to provide flightcrew guidance and emergency procedures for an inflight opening of the cargo door. Also contributing to the accident was the failure of the FAA to mandate modification to the door-open warning system for DC-9 cargo-configured airplanes, given the previously known occurrences of inflight door openings.

4. RECOMMENDATIONS

As a result of its investigation, the Safety Board made the following recommendations to the Federal Aviation Administration:

> Require that McDonnell Douglas amend its DC-9 Flight Crew Operating Manual "Cargo Door Opens After Takeoff" procedure to include the fact that the possibility exists that variations in indicated airspeed and altitude can exist during flight with an open cargo door. (Class II, Priority Action) (A-90-86)
>
> Place the entire "Cargo Door Opens After Takeoff" procedure into the FAA-approved DC-9 Flight Manual. (Class II, Priority Action) (A-90-87)

BY THE NATIONAL TRANSPORTATION SAFETY BOARD

James L. Kolstad
Chairman

Susan Couohlin
Acting Vice Chairman

Jim Burnett
Member

John K. Lauber
Member

April 23, 1990

5. APPENDIXES

APPENDIX A

INVESTIGATION AND HEARING

1. Investigation

The National Transportation Safety Board was notified of the accident about 0300 Eastern Standard Time, on March 18, 1989. An investigation team was dispatched from Washington, D.C. that morning and met with investigators from the NTSB Fort Worth Regional office at the scene of the accident around noon. On-scene investigative groups were formed for operations, structures, witnesses, hazardous materials/cargo and systems. Later, groups were formed for an aircraft performance stud;, flight data recorder, cockpit voice recorder, and maintenance records.

Parties to the investigation were the FAA, Evergreen International Airlines, McDonnell Douglas Aircraft Company, United Technologies Pratt and Whitney, and the 7th Bombardment Wing, Strategic Air Command, USAF.

2. Public Hearing

The Safety Board did not hold a public hearing on this accident.

APPENDIX B

PERSONNEL INFORMATION

Captain Gerald J. McCall

Captain McCall was employed by Evergreen Airlines since September 4, 1984. He held airline transport pilot certificate No. 375508516 with a rating for the DC-9 and commercial privileges for airplane single-engine land, issued July 3, 1985. At the time of the accident he had accumulated approximately 7,238 total flying hours, of which 1,938 were in the DC-9. His last proficiency check had been completed on July 18, 1988. He had received a simulator training/check ride in lieu of an inflight proficiency check on February 1, 1989. His last FAA first-class medical certificate had been issued on December 19, 1988, with no limitations. His last recurrent ground school had been accomplished on July 12-15, 1988.

First Officer Thomas B. Johnston

First Officer Johnston was hired on July 25, 1988. He held airline transport pilot certificate No. 2102930 with a rating for the Lear Jet and commercial privileges for airplane single-engine land and sea, issued on April 6, 1979. At the time of the accident he had accumulated approximately 10,863 total flying hours, of which 1,213 hours were in the DC-9. His last proficiency check had been completed on August 26, 1988, and he completed his training with landings in the DC-9 on August 31, 1988. His last FAA first-class medical certificate had been issued on October 13, 1988, with no limitations.

APPENDIX C

AIRPLANE INFORMATION

N931F, a McDonnell Douglas DC-9-33F, serial number 47192, was manufactured in 1968. It was placed into passenger and freight service with Konninklijke Luchvaart Maatschappij NV (KLM) on April 17, 1968. The aircraft was sold to the partners Con-Av Corporation and Air Traffic Corporation and flown to Dothan, Alabama, on April 16, 1987, for U.S certification and registration as N35UA. Evergreen International Airlines, Inc., accepted the aircraft (re-registered as N931F) and assumed maintenance control on June 1, 1987.

At the time of the accident N931F had a total airframe time of 41,931 hours and 40,808 cycles.

APPENDIX D

COCKPIT VOICE RECORDER TRANSCRIPT

TRANSCRIPT OF A SUNDSTRAND MODEL AV557-B COCKPIT VOICE RECORDER S/N 428 REMOVED FROM A EVERGREEN AIRLINES MCDONNELL DOUGLAS DC-99-33 AIRCRAFT WHICH WAS INVOLVED IN AN ACCIDENT AT CARSWELL AFB, TEXAS ON MARCH 18, 1989.

CAM	'Cockpit area microphone voice or sound source
RDO	Radio transmission from accident aircraft
-1	Voice identified as Captain
-2	Voice identified as First Officer
-3	Voice identified as Ground Crew
-?	Voice unidentified
GPWS	Ground Proximity Warning System
TWR	Carswell AFB Local Control (Tower)
UNK	Unknown
*	Unintelligible word
@	Nonpertinent word
#	Expletive deleted
%	Break in continuity
0	Questionable text
(())	Editorial insertion
	Pause

NOTE: All times are expressed in Central Standard time.

1

INTRA-COCKPIT		AIR-GROUND COMMUNICATIONS	
TIME & SOURCE	CONTENT	TIME & SOURCE	CONTENT
0142:36	((start of recording))		
0142:38 CAM-1	sound of laugh		
0142:41 CAM-2	airspeed bugs		
0142:43 CAM-1	* set		
0142:47 CAM-2	set		
0142:48 CAM-2	flight instruments compasses		
0142:49 CAM-1	checked and synched at ah two sixty eight		
0142:59 CAM-2	checked set right altimeters		
0143:00 CAM-1	twenty nine ninety six and six ah fifty four		
0143:06 CAM-2	twenty nine ninety six and ah six fifty CDI's		
0143:12 CAM-1	triple ought		
0143:14 CAM-2	twenty one radio's		
0143:15 CAM-1	tuned selected on one		

2

INTRA-COCKPIT

TINE & SOURCE	CONTENT
0143:18 CAM-2	windshield heat
CAM-1	on
0143: 19 CAM-2	engine airfoil ice protection
0143:20 CAM-1	off
0143:21 CAM-2	seat belt no smoking sign
0143:22 CAM-l	on
0143:25 CAM-2	trim tabs
0143:26 CAM-I	three set
0143:28 CAM-2	oxygen masks regulators
0143:29 CAM- 1	checked on
CAM-2	checked and set - fuel quanity
0143:31 CAM- 1	twelve five

AIR-GROUND COMMUNICATIONS

TIME & SOURCE	CONTENT

INTRA-COCKPIT

TIME & SOURCE	CONTENT
0143:32 CAM-2	*twelve, five*
0143:33 CAM-2	*that's where we stop*
0143:38 CAM-1	*okay this shall be a eighty six thousand pound flaps fifteen min configuration takeoff off on runway one seven-- in the event of an emergency standard Evergreen emergency brief will apply - check calls max power's set N-l eighty knots for a speed check V-l one twelve rotate one sixteen V-2 one twenty five -call positive rate monitor flight path and engine instruments to a thousand ACL -*
0144:01 CAM-2	*okay*
0144:02 CAM-1	*- be ah seventeen hundred barometric clearance is a runway heading up to four departure will be ah -*
0144:12 CAM-2	*f fourty one*
0144:17 CAM-l	*oh that's cool departure will be ninteen four and squawk is ah fifty two -*
0144:24	*((CVR tape reversed direction))*

A I R - - COMMUNICATIONS

TIME & SOURCE	CONTENT

4

INTRA-COCKPIT

TIME & SOURCE	CONTENT
0144:31 CAM-1	-twenty seven emergency return will be ah right traffic back to one seven and we are below landing weight
0144:36 CAM-2	okay
0144:38 CAM-2	is that the departure for Fort Worth
0144:41 CAM-1	yeah
0144:42 CAM-2	okay
0144:43 CAM-1	either nineteen four or nineteen eight either one
0144:46 CAM-2	understood
0144:47 CAM-1	((sound of laugh))
0144:50 CAM-2	at least that's what that guy says
0144:53 CAM-2	yeah but he he had worked two shifts so he really doesn't know what he's talking about

AIR-GROUND COMMUNICATIONS

TIME & SOURCE	CONTENT

INTRA-COCKPIT

TIME & SOURCE	CONTENT
0144:58 CAM-1	what's he doing at that ah scope
0145:05 CAM-2	oh lord knows
0145:11 ml-1	I would not want to work two shifts at DFW of course this is not really a bad shift here
	((general conversation for 13 minutes 27 seconds))
0158:44 CAM-1	when you close that ah door if you want ta look at that stall vane make sure it's not broken
0158:49 CAM-2	1 just checked it just a minute ago
0158:51 CAM-1	did ya
0158:53 CAM-1	they were awful close to it the other night
0158:58 CAM-2	well those lights must be able to swing out on that ah loader or something this one right here.here again almost right where the car- the door ah the door is cut in the fuselage

AIR-GROUND COMMUNICATIONS

TIME & SOURCE	CONTENT

INTRA-COCKPIT

TIME & SOURCE	CONTENT
0159: 16 CAM-2	*you can see where they scraped the # out of the bottom of the air- ah around the circle you know*
0159:21 CAM- 1	*yeah*
0159:25. CAM- 1	*we'll eventually lose that stall vane * they do*
0159:32 CAM- 1	*I've seen them break 'em too*
0159:38 CAM- 1	*oh no we didn't do that that was done when you got here - bologna*
0159:59 CAM-1	*did you ever find your pen*
0200:01 CAM-2	*naw I was just lookin' to see what was causin' that noise*
0200: 18 CAM- 1	*not doin' it now*
0200:21 CAM-3	*you already gave 'em paperwork*
0200: 22 CAM-2	*yeah*
0200: 24 CAM-3	*okay*

AIR-GROUND COMMUNICATIONS

TIME & SOURCE	CONTENT

INTRA-COCKPIT

TIME & SOURCE	CONTENT
0200: 29 CAM-2	I feel I think it's rubbing on the side of this ah shroud this guard right here
0200:32 CAM-1	yeah
0200:39 CAM-Z	you wouldn't be surprised at the # you find down here
0200:46 CAM-Z	a bunch of bulbs down there
0200:47 CAM-1	yeah I see on over here a broken one-
0200:54 CAM-1	well I guess he's done
0200:58	((CVR tape reversed direction))
0202:07 CAM	((sound similar to APU starting))
0202:27	. ((sound of electrical power being cycled))
0202:30 GPWS	whoop whoop terrain whoop whoop terrain

AIR-GROUND COMMUNICATIONS

TN & SOURCE	CONTENT

8

INTRA-COCKPIT

TIME & SOURCE	CONTENT
0202:46 CAM-2	cargo door's inspected tail stand I've removed it sill guards are on board
0202:54 CAM-1	well we got a problem
0202:57 CAM-2	uh oh
0202:58 CAM-1	in the elevator power
0203:01 CAM-2	don't have any - what ah - do that again
0203:17 CAM-2	need some hydraulic pressure on there don't ya
0203: 19 CAM-1	you got the accumulator
0203:21 CAM-2	oh that's right
0203:24 CAM-1	well think we'l1 go any ways
0203:33 CAM-l	you don't mind do ya

AIR-GROUND COMMUNICATIONS

TIME & SOURCE	CONTENT

INTRA-COCKPIT

TIME & SOURCE	CONTENT
0203:34 CAM-2	how much does that accumulator have in it seven hundred PSI pressure
0203:38 CAM-1	well it should have three thousand ah when it's charged
0203:46 CAM-1	you don't mind goin' without that do ya
0203:53 CAM-2	I don't care as long as you don't get this # in a -a -
0204:00 CAM-1	starting engines
0204:04 CAM-2	ah parkin' brake
0204:04 CAM-1	set
0204:10 CAM-2	pneumatic cross feed valves
0204:11 CAM-1	open.
0204:12 CAM-2	nav anti-collision lights

AIR-Q COMMUNICATIONS

TIME & SOURCE	CONTENT

10

INTRA-COCKPIT

TIME & SOURCE	CONTENT
0204: 13 CAN-1	*on*
0204: 14 CAM-2	*air condition supply switches*
0204:15 CAM- 1	*off*
0204: 16 CAM-2	*fuel pumps*
0204: 17 CAM-l	*main's on center's off*
0204: 18 CAM-2	*pneumatic pressure*
0204: 19 CAM-1	*fourty PSI*
0204:20 cAIl-2	*ignition*
0204121 CAM-1	*ground start continuous*
0204:22 CAM-2	*start* clearence
0204:23 CAM-1'	*received*

A I R - B COMMUNICATIONS

TIME & SOURCE	CONTENT

INTRA-COCKPIT

TIME & SOURCE	CONTENT
0204:26 CAM-2	starting engines check's complete
CAM-1	okay start valve's open pressure drop holding
0204:27 CAM-1	N-2 hydraulics
0204:32 CAM-1	oil pressure - N-1
0204:36 CAM-1	I'm just funnin' ya
0204:39 CAM-2	oh what did you do
0204:41 CAM-1	I just bled the ah pressure off just did it several times till it wouldn't do it any more
0204:45 CAM-1	okay N-1 fuel's on normal flow light off
0204:51 CAM-2	yeah how'd you bleed the pressure off
0204:53	((sound of generator coming on line

AIR-GROUND COMMUNICATIONS

TIME & SOURCE	CONTENT

12

INTRA-COCKPIT

TIME & SOURCE	CONTENT
0204:55 CAM-1	just have to keep doin' it keep activating it monitor start check electrics okay start valve's open pressure drop holding
0205:02 CAM-1	N-2
0205:05 CAM-1	hydraulics - oil pressure - N-1
0205:20 CAM-2	number two start's stable electric's checked
0205:22 CAM-1	*
0205:26 CAM-1	twenty percent fuel's on normal flow light off
0205:38 CAM-1	thirty five percent start valve's closed pressure's up after start check
0205:40	((sound of generator coming on line))
0205:53 CAM-2	number one's start is stabilized electric's checked
0205:57 CAM-1	okay after start checklist

AIR-GROUND COMMUNICATIONS

TIME & SOURCE	CONTENT

INTRA-COCKPIT

TIME & SOURCE	CONTENT
0205: 59 CAM-2	start, valves
0206:00 CAM-1	closed lights out
0206:01 CM-2	ignition
0206:02 CAM-1	off
0206:03 CAM-2	electrical system
0206:04 CAM-1	is checked
0206:05 CAM-2	engine anti-ice
0206:06 CAM- 1	off
0206:07 CAM-2	air conditioning supply switches
0206:08 CAM-1	auto
0206:09 CAM-2	APU air switch

AIR-GROUND COMMUNICATIONS

TIME & SOURCE	CONTENT

INTRA-COCKPIT

TIME & SOURCE	CONTENT
0206:10 CAM-1	off
0206:11 CAM-2	doors
0206:12 CAM-1	closed lights out
0206:13 CAM-2	pneumatic cross feed valves
0206:14 CAM-1	closed
0206:15 CAM-2	ground power pneumatics
CAM-1	removed
0206:16 CAM-2	hydraulic pressures and quantity
0206:17 CAM-1	six checked
0206:18 CAM-2	STAN system is not on board after start check's complete clear on the right
0206:21 CAM-1	alright thank you

AIR-GROUND COMMUNICATIONS

TIME & SOURCE	CONTENT

INTRA-COCKPIT

TIME & SOURCE	CONTENT
0206:44 CAM-1	*we'll want the' full length*
0207:05 CAM-1	*okay slats extend flaps fifteen arm the anti skid taxi checklist*

AIR-GROUND COMMUNICATIONS

TIRE & SOURCE	CONTENT
0206:25 RDO-2	*ground* **Logair** *nine thirty one taxi for departure*
0206:31 GND	**Logair** *nine thirty one taxi to runway one seven intersection departure eight thousand five hundred feet available winds are two four zero at one zero the altimeter - standby*
0206:50 RDO-2	*we're gunna need the full length for* **Logair** *nine thirty one*
0206:53 GND	**Logair** *nine thirty one roger and altimeter niner niner seven*
0206:56 RDO-2	*two niner niner seven roger* **Logair** *nine thirty one*
0206:59 GND	*have an* **ammendment** *to your clearance sir*
0207:08 GND	**Logair** *nine thirty one on departure squawk five two three zero*

INTRA-COCKPIT

TIME & SOURCE	CONTENT
0207:19 CAM-2	*okay*
0207:37 CAM-2	*okay* **pitot** *heat is on captain stabilizer*
0207:42 CAN-1	*rogers nineteen point seven percent*
0207:45 CAM-2	*nineteen point seven percent checked flaps*
0207: 49 CAM-1	*fifteen on the handle - guage - and the lights are checked*
0207:51 CAM-2	*fifteen degrees on the handle -*
0207:53 CAM-1	*arm the anti-skid please*
0207:54 CAM-2	*- guage lights are checked what did you say oh yeah the anti skid sorry about that*
0208:00 CAM-2	*flight controls*
0208:02 CAM-1	*checked*

AIR-GROUND COMMUNICATIONS

TIME & SOURCE	CONTENT
0207:11 RDO-2	*five two three zero roger*

INTRA-COCKPIT

TIME & SOURCE	CONTENT
0208:04 CAM-2	*are checked - yaw damper is on fuel pumps are mains on center's off aux transfers off*
0208: 11 CAM-2	*fuel heat is off anti skid is armed APU master switch is off APU is down seatbelts shoulder harness is on*
0208: 16 CAM-1	*on*
0208: 18 CAM-2	*takeoff briefing is understood taxi check's complete*
0208:20 CAM-1	*okay I'm ready if you are*
0208 : 36 CAM- 1	• ⌧⌧⌧

AIR-GROUND COMMUNICATIONS

TIME & SOURCE	CONTENT
0208: 23 RDO-2	*lower* **Logair** *nine thirty one is ready to go one seven*
0208: 27 TWR	**Logair** *nine thirty one wind three zero zero at six cleared for takeoff*
0208: 34 TWA-	*cleared for takeoff* **Logair** *nine thirty one*

INTRA-COCKPIT		AIR-GROUND COMMUNICATIONS	
TIME & SOURCE	CONTENT	TIRE & SOURCE	CONTENT
0208:37 CAM-2	I forgot to do that before flaps vee speeds and'trim		
0208:45 CAM-1	oh you mean we haven't done any of that alright - checklist		
0208:50 CAM-1	okay rechecked		
0208:54 CAM-2	rechecked aux and alt pumps are on engine anti ice is off airfoil ice protection is off annunciator panel's checked ignitions on ground start continuous transponder's on code fifty two thirty		
0209:05 CAM-2	JATO's not onboard landing lights		
0209:06 CAM-I	on		
0209:07 CAM-2	before takeoff check's complete		
0209:13 CAM	((sound of increasing engine noise))		
0209: 20 CAM-2	spooled		

INTRA-COCKPIT

TIM & SOURCE	CONTENT
0209 : 22 CAM- 1	*okay*
0209 : 24 CAM-1	*max power please*
0209: 26 CAM-2	*max power is set*
0209 : 28 CM-2	*N-l's are ninety four and ninety six percent*
0209: 36 CAM-2	*eighty knots*
0209 : 38 CAM-1	*checked'*
0209:44 CAM-2	*vee one*
0209:46 CAM-2	*rotate*
0209: 49 *CAM*	*((increase in background noise starts and continues until end of tape))*
0209: 57 *GPWS*	*whoop whoop terrain*
0210:00 GPWS	*whoop whoop terrain*
0210:02 *GPWS*	*whoop whoop terrain*

AIR-GROUND COMMUNICATIONS

TIME & SOURCE	CONTENT

APPENDIX D

INTRA-COCKPIT

TIME & SOURCE	CONTENT
0210:04 GPWS	whoop whoop terrain
0210:06 CAM-2	main cargo door
0210:11 CAM-1	alright declare an emergency tell 'em we're comin' back around
0210:21 CAM-1	okay * gear up
0210:25 CAM-2	gear is up

AIR-GROUND COMMUNICATIONS

TIME & SOURCE	CONTENT
0210:14 RDO-2	Logair nine thirty one ah we've got an emergency we're coming back around
0210:18 TWR	Logair nine thirty one roger
0210:26 TWR	Logair nine thirty one say nature of emergency sir
0210:29 RDO-2	okay we got a cargo door open
0210:32 TWR	roger

21

INTRA-COCKPIT

TIME & SOURCE	CONTENT
0210:32 CAM-1	* off
0210:36 CAN-2	want some help on the rudder
0210:38 CAM-1	****
0210:40 CAM-2	which way is depressurize
0210:42 CAM-2	* turn it
0210:47 CAM-1	all the way over
0210:49 CAM-1	packs off
0210: 50 CAM-2	packs off
0210:51 CAM-2	packs going off
0210:53 CAM-1	• .
0211:00 CAM-2	you want missed approach quick return check

AIR-GROUND COMMUNICATIONS

TIME & SOURCE	CONTENT

INTRA-COCKPIT

TIME & SOURCE	CONTENT
0211:03 CAM-1	*what's that*
0211:04 CAN-2	*missed approach quick return check*
0211:05 CAM-1	alright
0211:18 CAM-2	*okay flaps are fifteen*
0211:20 CAM-1	*okay*

AIR-GROUND COMMUNICATIONS

TIME & SOURCE	CONTENT
0211:10 TWR	*nine thirty one tower*
0211:12 RDO-2	alright *go ahead*
0211:14 TWR	*roger sir I understand you go ah* come *back around on down wind and land*
0211:22 RDO-2	*okay we're comin' back around and land on one seven*
0211:25 TWR	*nine thirty one roger report base runway one seven*

INTRA-COCKPIT

TIME & SOURCE	CONTENT
0211:27 CAM-2	spoilers
0211:29 CAM-1	disarmed
0211:31 CAM-2	arm them
0211:32 CAM-1	disarmed
0211:33 CAM-2	okay
0211:34 CAM-2	ignition is on
0211:37 CAM-2	airspeed EPR bug
0211:42 CAM-1	okay go ahead and pull out the bugs chart
0211:49 CAM-1	okay ah-
0211:51 GPWS	whoop whoop terrain
0211:53 CAM-2	bug speed -

AIR-GROUND COMMUNICATIONS

TIM & SOURCE	CONTENT

APPENDIX D

24

INTRA-COCKPIT

TIME & SOURCE	CONTENT
0211:53 GPWS	whoop whoop terrain
0211:57 CAM-1	call out the bugs for me
0211:59 CAM-2	bugs speeds are gunna be a landing seventy ah -
0212:05 CAM-2	one twenty five and one thirty
0212: 19 CAM-1	alright what have you got would you say that door is open or closed
0212:24 CAM-2	I can't tell
0212:27 CAM-1	ready
0212:30 CAM-2	okay air conditioning and pressurization is ah off
0212:35 CAM-2	missed approach quick return check complete

AIR-GROUND COMMUNICATIONS

TIME & SOURCE	CONTENT
0212: 12 RDO-2	ah Logair nine thirty one are we cleared to land

INTRA-COCKPIT

TIME & SOURCE	CONTENT
0212:38 CAN-1	alright
0212:39 CAM-2	* set up the localizer
0212:43 CAN-1	*
0212:48 CAM-2	okay one oh eight seven
0212:54 CAM-2	inbound course is one seventy - one seuenty three
0213:03 CAM-2	okay the localizer is *
0213: 12 CAM-2	we're not gettin' 'em at all now
0213: 17 CAM-1	(no marker beacon)
0213:30 CAM-2	not gettin' him at all

AIR-GROUND COMMUNICATIONS

TIME & SOURCE	CONTENT
0213:06 RDD-2	and is Logair nine thirty one ah we cleared to land
0213: 19 RDO-2	lower Logair nine thirty one

INTRA-COCKPIT

TIME & SOURCE	CONTENT
0213:41 CM-1	*go to approach*
0213:52 CAM-1	*okay here's what I think*
0213:54 CAM-1	• *turn back in here*
CAM-2	alright
0214:00 CAM-1	*take it out far enough so* I can *get it stabilized then turn it back in*
0214:03 CAM-2	*okay*
0214:04 CAM-2	*we're still* at flaps fifteen
0214:05 CAM-1	I know
0214:06 CAM-2	*okay*
0214:08 CAM-1	alright *I'm gunna turn now*

AIR-GROUND COMMUNICATIONS

TM & SOURCE	CONTENT
0213:34 RDO-2	Carswell *Tower* Logair *nine thirty one*
0213:44 RDD-2	*Approach* Logair *nine thirty one*

INTRA-COCKPIT

TIME & SOURCE	CONTENT
0214:18 CAM-2	alright
0214:21 CAM-2	okay we go back -
0214:22 CAM-1	broadcast in the blind tell them we want the equipment stand by
0214:43.5 CAM-2	now the radio's gone
0214:49.7 CAM-1	now let's go gear down before landing check
0214:52.5 CAM-2	alright gear's coming dawn before landing check
0215: 13.8 CAM-1	okay can you see the runway *

AIR-GROUND COMMUNICATIONS

TIME & SOURCE	CONTENT
0214:26.2 RDO-2	Logair nine thirty one Carswell how do you read
0214:31.3 RDO-2	ah we're broadcasting in the blind ah Logair nine thirty one ah we're turning a base gunna be landing runway one seven and we'd like equipment standing by

INTRA-COCKPIT

TIME & SOURCE	CONTENT
0215:16.6	
CAH-2	the runway's still over here
CAM-l	okay
0215:17.4	
CAM-2	you're on a base turn back to the left
0215: 19.4	
CAM-1	keep callin' them out
0215:26.7	
CAM-l	(still see 'en) (okay that's the way I'm gunna go)
0215:27.9	
CAM-2	uh unh I think you want to go the other way
0215:28.6	
CAN-1	I think you're right
0215:30.5	
	((background noise level decreases))
0215:33.1	
CAM-?	no
0215:37.4	
CAM-2	push forward push forward
0215:38	
CAM-?	*

AIR-GROUND COMMUNICATIONS

TIM! & SOURCE	CONTENT

INTRA-COCKPIT

TIME & SOURCE	CONTENT
0215:40.0 CAM-?	oh no
0215:40.5	((end of recording))

AIR-GROUND COMMUNICATIONS

TIME & SOURCE	CONTENT

APPENDIX E

AIRPLANE PERFORMANCE STUDY MATERIAL

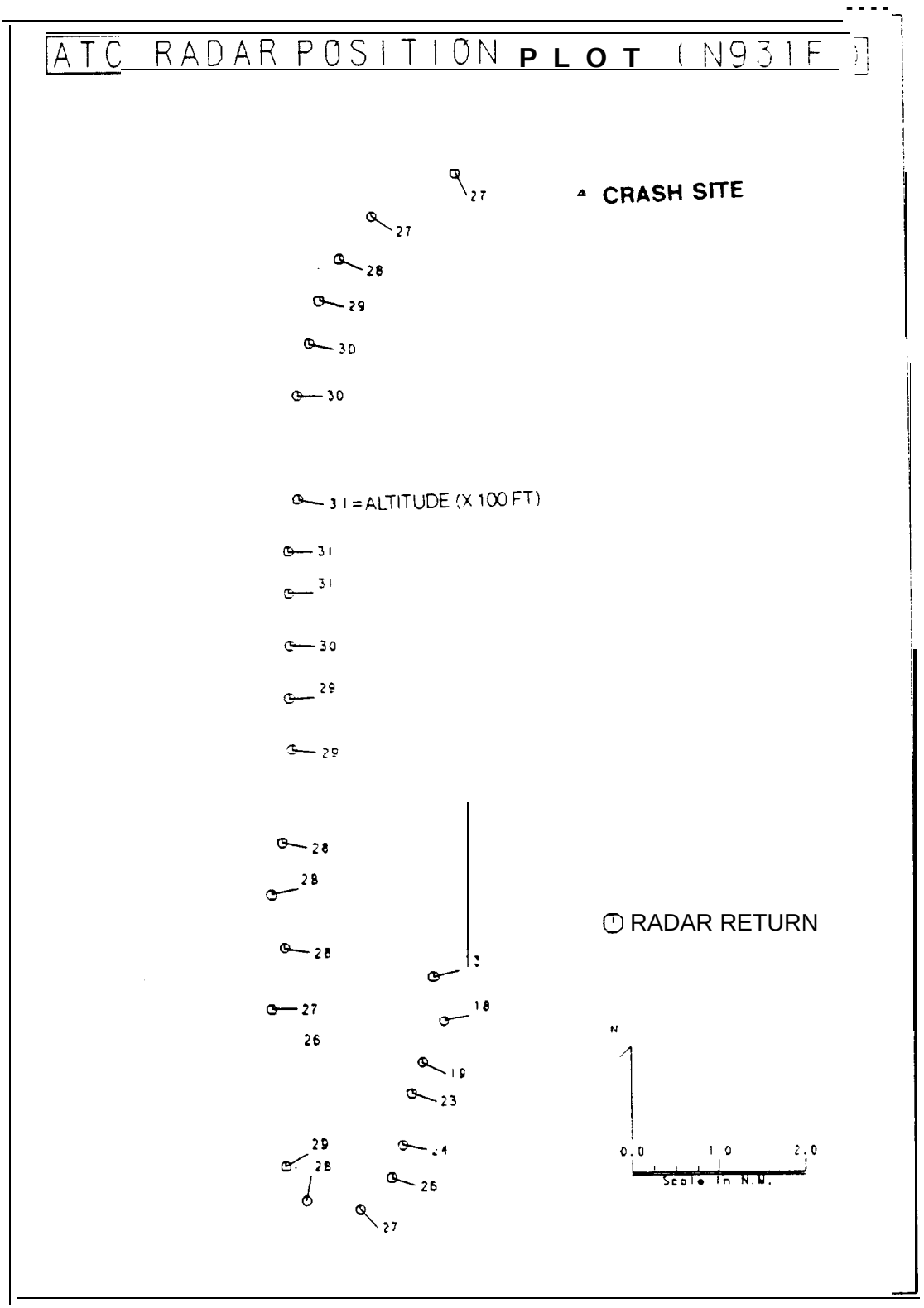

APPENDIX E

[FDR GROUND TRACK VS. ATC RADAR PLOT]

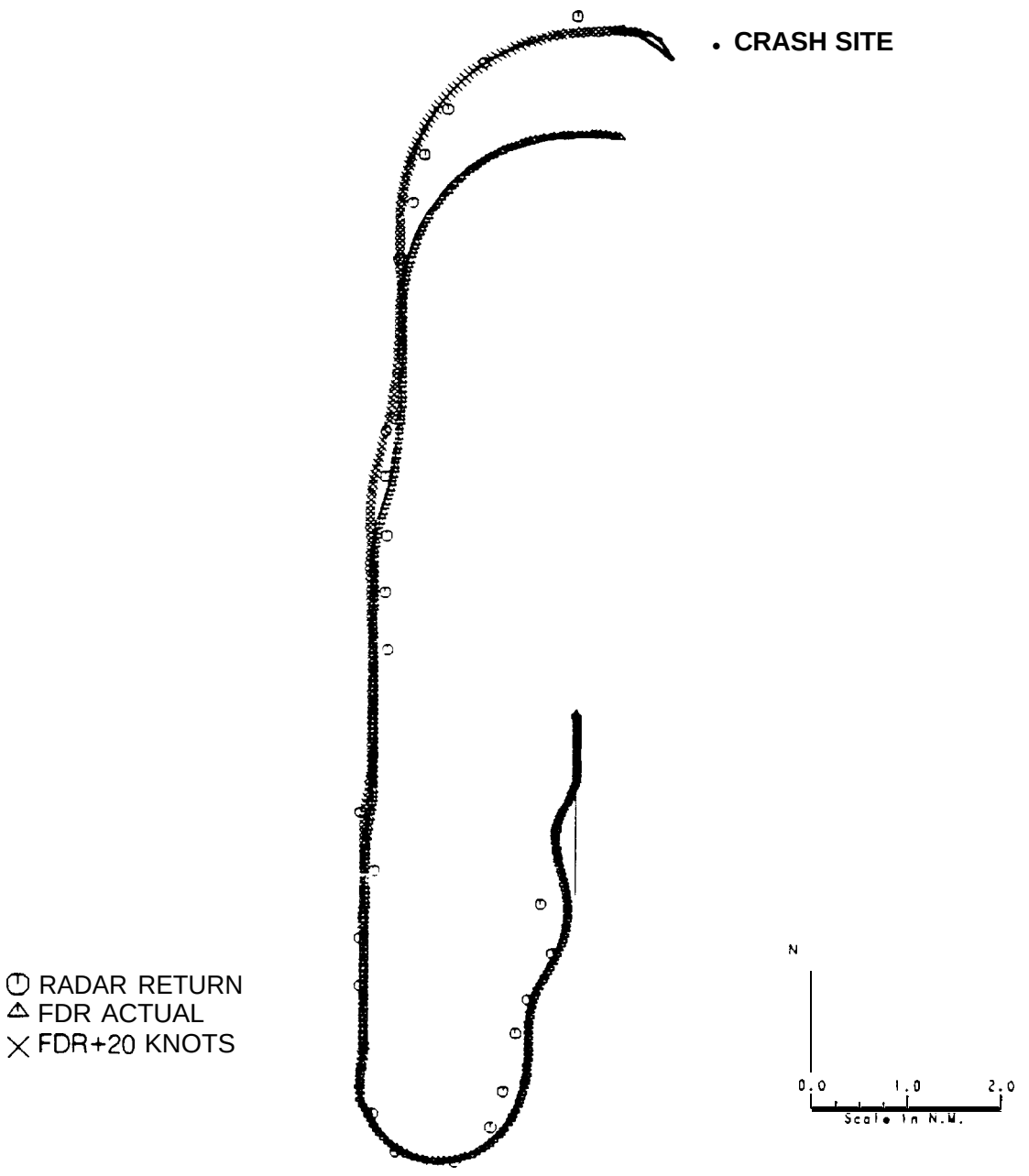

FDR DERIVED GROUND TRACK AND CVR EVENTS

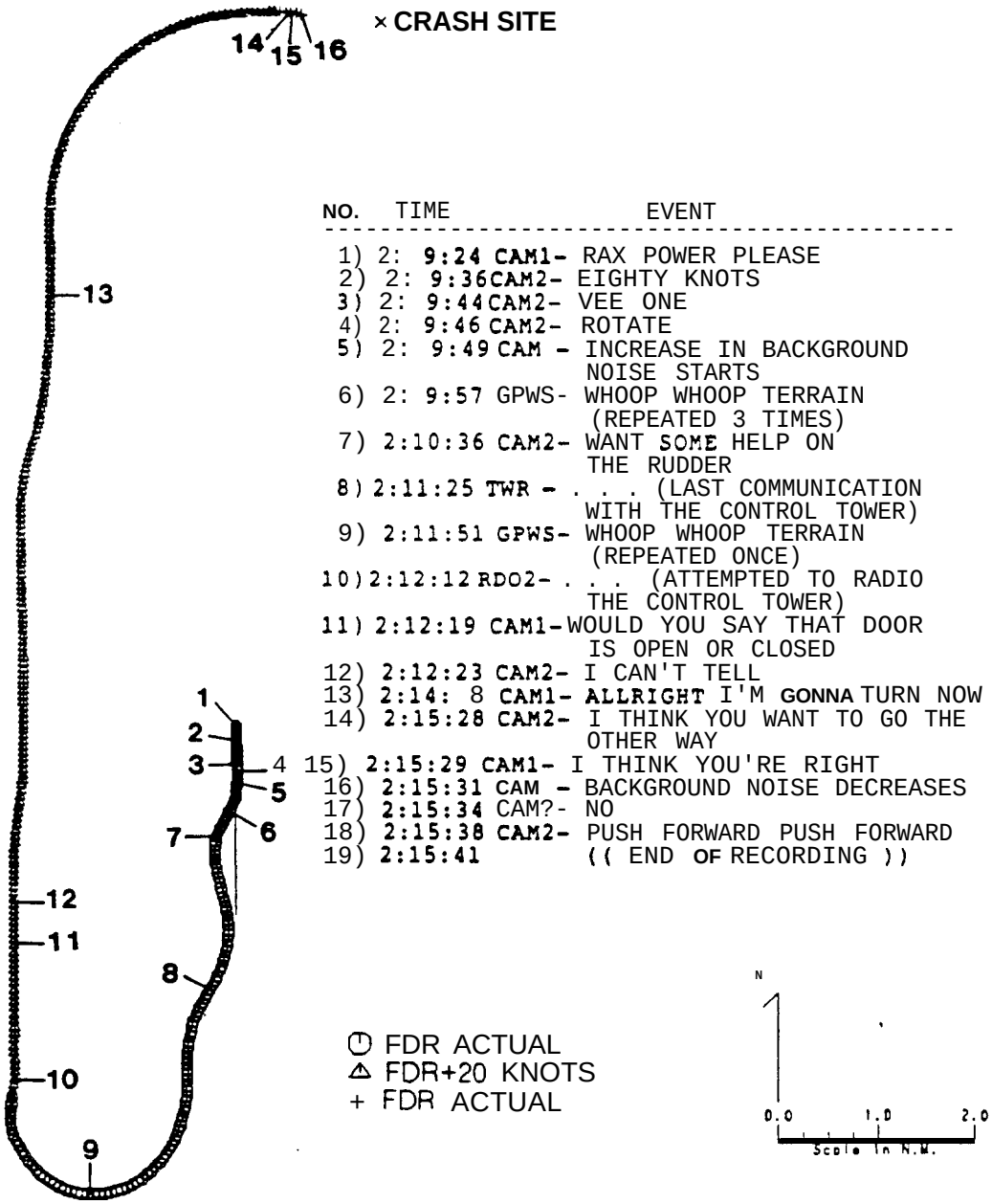

NO.	TIME		EVENT
1)	2: 9:24	CAM1-	RAX POWER PLEASE
2)	2: 9:36	CAM2-	EIGHTY KNOTS
3)	2: 9:44	CAM2-	VEE ONE
4)	2: 9:46	CAM2-	ROTATE
5)	2: 9:49	CAM -	INCREASE IN BACKGROUND NOISE STARTS
6)	2: 9:57	GPWS-	WHOOP WHOOP TERRAIN (REPEATED 3 TIMES)
7)	2:10:36	CAM2-	WANT SOME HELP ON THE RUDDER
8)	2:11:25	TWR -	. . . (LAST COMMUNICATION WITH THE CONTROL TOWER)
9)	2:11:51	GPWS-	WHOOP WHOOP TERRAIN (REPEATED ONCE)
10)	2:12:12	RDO2-	. . . (ATTEMPTED TO RADIO THE CONTROL TOWER)
11)	2:12:19	CAM1-	WOULD YOU SAY THAT DOOR IS OPEN OR CLOSED
12)	2:12:23	CAM2-	I CAN'T TELL
13)	2:14: 8	CAM1-	ALLRIGHT I'M GONNA TURN NOW
14)	2:15:28	CAM2-	I THINK YOU WANT TO GO THE OTHER WAY
15)	2:15:29	CAM1-	I THINK YOU'RE RIGHT
16)	2:15:31	CAM -	BACKGROUND NOISE DECREASES
17)	2:15:34	CAM?-	NO
18)	2:15:38	CAM2-	PUSH FORWARD PUSH FORWARD
19)	2:15:41		((END OF RECORDING))

☆ U.S. GOVERNMENT PRINTING OFFICE: 1990-261-991:20006