WATER MIST FIRE PROTECTION SYSTEMS FOR TELECOMMUNICATION SWITCH GEAR AND OTHER ELECTRONIC FACILITIES

Andrew T Hills, Terence Simpson* and David P Smith
Fire and Safety International - Research
Mill House, Poyle Road, Colnbrook
Slough, SL3 0HB, Great Britain

SUMMARY

Although water is known to be an effective Class A and B fire suppressant, scepticism remains over its use in Class C applications due to its conductivity. Therefore, a joint Kidde-Fenwal/GTE/FSI Research feasibility study into water mist fire protection in live telecommunication switch gear was carried out.

The switch gear bays, which were composed of vertically mounted, parallel printed circuit boards (PCBs), were found to be a considerable fire threat. A localised 'in cabinet' fire suppression system comprising single fluid spray nozzles operating at high pressure was used. Test fires were extinguished in 1-2 seconds using less than 1 L (0.26 US gal) of water. In addition, the current trips contained in the switch were activated when water was incident and this result, coupled with the low volume of water used, reduces the electric shock hazard considerably.

Therefore, water was found to be an efficient and safe fire suppressant in switch gear. Since these initial experiments, further tests have been carried out on alternative equipment supplied by Mercury Communications, for which findings are briefly presented.

1. INTRODUCTION

The FSI Research Department is a group of about 20 scientists and engineers which undertakes projects on behalf of the companies within the FSI Group (Kidde-Graviner and Kidde-Hartnell in Great Britain, Kidde-Fenwal, Walter Kidde Portables, Walter Kidde Aerospace, Fenwal Safety Systems and Detector Electronics in the USA, Deugra in Germany, Kidde-Dexaero in France and Pyron in Australia). FSI Research's extensive experience in water mist technology, including its computer cabinet fire protection studies, prompted Kidde-Fenwal, in conjunction with GTE, to initiate a feasibility study into water mist fire protection in telecommunication facilities.

Gas-flooding systems are commonly employed in computer installations whereby a gaseous fire extinguishing agent is introduced into an enclosed space via either a fixed pipe system from a large storage vessel or by a number of in situ pressurised bottles. The conventional agents used in these applications are the Halons 1211 and 1301 and CO_2. The advantages of these extinguishants when used as a means of protecting sensitive electronic equipment are that they are non-conductive and able to permeate to obscured fires.

* Author to whom all correspondence should be addressed

Problems arise when using CO_2 because the concentration required to suppress fires (around 30%) will be lethal to humans. Measures must be taken, therefore, to ensure that all staff are evacuated from the room prior to discharge, and that re-entry is delayed until the area is fully ventilated. Other problems encountered include damage to equipment caused when objects are dislodged by the fast discharge of a large volume of gas, and thermal shock resulting from the rapid cooling of the air during this process.

Halon 1211 has a suppression design concentration of 5 to 8%. This gas is toxic at these concentrations, however, resulting in dizziness and impaired co-ordination as well as some risk of cardiac arrhythmias. In common with CO_2, therefore, persons should not be present in the protected space during or directly following discharge. Halon 1301 is less toxic than 1211; a concentration of up to 7% does not cause undue effects in humans. Since it is inherently safer than 1211 or CO_2 at effective fire fighting concentrations, Halon 1301 used to be the preferred option for gas flooding.

Halons, however, have been shown to be responsible for a considerable part of the damage to the ozone layer observed since 1978. As a result, they were included in the list of compounds whose production is to be controlled and ultimately phased out under the Montreal Protocol [1]. This legislation sought to control the production of Halons at 1986 levels and subsequently reduce them. These control measures were further tightened in 1990 at the London Review Meeting of the Montreal Protocol [2]. A further review took place in Copenhagen in November 1992 and as a result, a total ban on Halon production is now being implemented as early as January 1994.

Clearly there is an urgent need to find a suitable replacement fire suppression system, with water mist being one possible candidate as it has been found to be an efficient Class A and B fire suppressant and is also non-toxic, cheap and environmentally friendly.

1.1 Water as a Fire Suppressant

Water's favourable physical properties are utilised when it is employed as a fire suppressant. Its high heat capacity (4.2 J g^{-1} K^{-1}) and latent heat of vaporisation (2442 J g^{-1}) result in the abstraction of heat from flames and fuel, leading to extinguishment. In addition, the steam produced upon evaporation aids extinguishment by diluting the vapour phase concentration of fuel and oxygen (water expands 1700 times upon evaporation to steam) [3].

To achieve its full thermodynamic potential, water is produced in the form of a spray thus maximising the surface area for heat absorption and evaporation. It follows that finer sprays are more efficient at heat absorption relative to more coarse sprays.

To extinguish Class A and B fires rapidly, direct impingement is essential. Also, for Class B fires, complete surface coverage of the fuel is important. For direct impingement to be efficient, the downward momentum of the spray must overcome the upward thrust of the flames and fire gases in order to penetrate to the combustion zone. Furthermore, droplet size must have a lower limiting value because droplets must be large enough to penetrate to the core of the fire [4].

In some environments, direct impingement of spray onto a fire is not possible. However, water fog can be used as a 'total flood' agent in these cases. Again small droplets facilitate extinguishment, the droplets being entrained into the flames. Extinguishment is brought about by the gradual cooling of the flames and the inerting effect of localised steam production.

Scepticism remains over the use of water in Class C environments as it conducts electricity which could lead to equipment damage and shock hazard to personnel. Recent research suggests it is possible to use water spray in Class C facilities safely and without causing damage [5]. The aim of this project, therefore, was to establish the feasibility of using water spray/mist in telecommunication installations. To this end, GTE donated 34 2EAS telecommunication switch gear bays plus power supplies to Kidde-Fenwal for trials work, the testing taking place at Fenwal Safety Systems Inc., Combustion Research Centre in Holliston, Massachusetts.

Fire suppression studies in telecommunication facilities have so far been limited to cable fires, where it is agreed the main fire threat lies, and it has been shown that water spray is effective against such fire challenges [5], [6]. We believe that this is the first study into fire suppression in telecommunication switch gear and intend to prove that there was indeed a fire threat associated with this equipment and that water fog can be an efficient, safe and non-destructive extinguishant.

It was made clear at the outset of this project that GTE did not want a total room flooding water mist system because of the potential disruption this may cause to non-affected switch gear bays contained in the suite; GTE stipulated that all switch gear bays not affected by fire must remain live.. Tests were largely confined, therefore, to systems deploying water spray within the switch gear bays themselves.

2. EXPERIMENTAL CONSIDERATIONS

2.1 GTE 2EAS Switch Gear

The switch gear bays contained several types of PCBs separated at different intervals depending on the function of the bay. The PCBs contained in the switch were either relay boards, Complementary Metal Oxide Semiconductor (CMOS) control boards or power supply units. The dimensions of a typical switch are shown in Figure 1.

The switch gear bays chosen for all the fire tests had the densest array of printed circuit boards possible, with the boards being positioned such that void channels ran vertically through the bay, allowing direct impingement of top-mounted sprays onto the test fire. These bays had PCBs with separations of 0.01 m.

The switch gear bays were powered-up using a 50 V/10 A DC battery charger.

2.2 Ignition Method

Nichrome ribbon (0.5 m x 0.005 m) was weaved into four slits (0.10 m) cut into a reed relay board stripped of all its components (Figure 2). The wire was connected via spring loaded clamps to a 20 A variable transformer. The Nichrome ribbon glowed red and caused ignition within 30 seconds when approximately 30 V AC was supplied.

2.3 Instrumentation and Measurements

2.3.1 Temperature Measurement

A total of 12 mineral insulated bare tip type K (nickel chromium alloy/nickel aluminium alloy) thermocouples were deployed in most experiments. The positions of the thermocouples used during the test programme are given in Figure 3.

2.3.2 Smoke Measurement

The obscuration equipment was a two part system comprising a remote optical head unit linked to an amplifier/driver unit, the former being mounted above the switch (Figure 4). A 4 Hz light signal generated from a 2 V, 340 mA filament lamp was passed through a collimating lens and directed across a 30 cm path length to a collecting lens. The light was focused onto a BPW 21 photodiode and the resulting signal amplified and passed to the amplifier driver unit via a 20 m cable. Signals to the 4 Hz lamp and from the amplifier photodiode were fed into an AD630 phase detector integrated circuit in order to enhance the smoke obscuration signal, thereby enabling the unit to operate in high and variable ambient light conditions. The analogue voltage produced was then passed to an Orion data acquisition system (see section 2.3.7).

2.3.3 Radiation Measurement

An infrared (IR) flame detector was positioned at a height and distance of 0.5 m and 1.2 m respectively. The detector comprised a thermopile fitted with a 4.4 μm filter, with the signal produced being amplified and recorded by the data acquisition system. A flame flicker signal was also recorded by AC coupling the amplified signal.

2.3.4 Hydrogen Chloride Concentration Measurement

A Servomex 1490 IR analyser was used to monitor constantly the concentration of hydrogen chloride (HCl). The inlet tube for the analyser was positioned above the switch (Figure 4), the gas reaching the analyser by means of a small air pump.

2.3.5 High Sensitivity Smoke Detection

A Kidde-Fenwal high sensitivity smoke detector (Analaser) was used in some experiments. The inlet tube for the Analaser was placed above the switch gear bay (Figure 4).

2.5.2 Suppression Tests

For each nozzle manifold position, the fire challenge was the same in terms of relative position and intensity. The distance between the nozzles and fires was as large as possible and the densest array of PCBs was chosen to maximise the degree of obstruction to the spray.

Pre-burn was measured from the commencement of flaming combustion and was judged visually. The water fog was activated after flaming combustion was sustained on the level above the ignition source; the time for this to be achieved was usually between 90-180 seconds.

3. RESULTS

3.1 Unsuppressed Fire Test

Ignition was by the Nichrome ribbon method (see section 2.2) and the ignition board was placed in a central position at the base of the bay. Dense red smoke was produced upon ignition, the smoke obscuration above the bay reaching 100% in seconds. Upon the commencement of flaming combustion, the smoke lost its red coloration.

After ignition the fire was found to propagate vertically up the switch, with temperatures reaching 600-800 °C. As the intensity of the fire increased, more lateral spread was apparent and at its peak, temperatures were in excess of 1000 °C with flames rising 2-4 m above the bay.

Smoke obscuration inside the building reached 100% within 20 minutes. IR flame flicker measurements revealed combustion ceased after 30 minutes. No hydrogen chloride was detected in the course of this experiment.

3.2 Fire Suppression Tests

3.2.1 General Comments on Instrumentation Results

In general, maximum temperatures at the ignition source were between 350-500 °C, with the rate of temperature rise being in the order of 100-200 °C/min. Thermocouples placed at the top of the switch did not show consistent temperature rises, if any temperature rise was recorded at all.

3.2.2 Smoke Obscuration and High Sensitivity Smoke Detector Results

Smoke obscuration above the switch gear bay reached 100% within seconds of the activation of the Nichrome ribbon. The Analaser, when used, went into alarm immediately after the Nichrome ribbon was switched on. When the nozzles were placed at the top of the bay, the smoke obscuration fell markedly upon activation of the spray.

3.2.3 Hydrogen Chloride Analysis

The concentration of hydrogen chloride never rose above 10 ppm in any of the experiments conducted, with no HCl detected in the majority of tests.

3.2.4 Pressure Measurement

Pressure measurement at the nozzle manifold enabled the pressure drop between the bottle and nozzles to be determined and hence allowed the accurate calculation of flow rates based on manufacturer's data.

3.3 Suppression Results

Fire tests conducted with nozzle manifolds mounted at the top of the switch revealed that single fluid, full cone and narrow discharge angle nozzles operating at high pressures were the most efficient types. The high velocity fogs produced by these nozzles could repeatedly extinguish a test fire within 2 seconds using less than 1 L of water.

High water flow rate, low pressure, coarse (sprinkler like) sprays used more water and gave longer extinguishment times than the high velocity fogs. In addition, low water flow rate, low pressure, fine sprays used in recent studies [5] consumed more water and gave longer extinguishment times than the high velocity fog.

Air atomising nozzles gave good results for small scale test fires. However, if a fire was of greater intensity, these nozzles resulted in longer extinguishing times and used more water than the high pressure single fluid nozzle combination.

The high pressure single fluid nozzle combination was also found to give the best results when mounted at the bottom of the switch, although their performance was not as good as when they were placed at the top of the bay.

Wide cone angle single fluid nozzles operating at high pressures gave good results when mounted at the front of the switch.

Remote room fogging experiments proved to be far less effective than the in-cabinet arrays.

3.4 Discharge Tests on Live Switch Gear

The different types of switch gear were all powered using a 50 V (DC) battery charger. Tap or distilled water was discharged onto the switch using a frontal nozzle array. As soon as water was in direct contact with the PCBs, the trips contained were activated, cutting off power to the switch. All the switch gear bays became fully operational when dry.

Some PCBs were connected to the mains 110 V supply. Circuit breaks were activated upon the application of water. Again, the boards became fully operational when dry.

3.5 Suppression Tests in Live Switch Gear

Fire suppression tests were conducted on live switch gear. The trips contained in the switch gear bay were activated when water fog was incident. Occasionally, smoke from the fire activated trips prior to suppressant discharge.

Fire characteristics were not different from those in unpowered switch gear. The fires were extinguished in under 2 seconds using the optimum top-mounted, single fluid nozzle, high pressure array.

The switch became fully operational when dry (except for the fire damaged cards). The long term effect of the exposure of PCBs to smoke, fire and water is being examined by GTE.

3.6 Leakage Current Measurement

Leakage currents between two parallel tracks on a PCB surface were measured using the apparatus described in Section 2.3.8. The leakage currents for distilled water, tap water and the condensed material from smoke were 18, 45 and 56 μA respectively with resistances of 1.80, 0.21 and 0.20 MOhm respectively.

4. DISCUSSION

4.1 Unsuppressed Fire Test

The damage caused by a fire in a switch gear bay is extensive. The PCBs directly affected by the fire are rendered completely unusable. The IR output and thermocouple measurements of the fire reach maximum values in about 10-12 minutes with temperatures high enough at the peak of combustion to melt some of the solder and aluminium components contained on the PCBs. The combustible-rich smoke plume leads to flames reaching 2-4 m above the switch gear bay.

The lateral spread of the fire, coupled with the flames in the smoke plume and high temperatures, means that the chances of the fire remaining contained in a single switch gear bay if unchecked are minimal. The cables usually present above the bay would be easily ignited by flames in the smoke plume, and the proximity to other switch gear bays in normal operation means neighbouring bays are also likely to burn.

4.2 Suppression Tests

The high velocity fogs produced by single fluid nozzles at high pressures proved to be the most efficient fire suppressing combination when placed either at the top, bottom or front of the switch. In addition to the other benefits of fine sprays, the high velocity fog is able to negotiate obstacles and penetrate to the seat of a fire.

When placed at the top or bottom of the switch, narrow cone angled sprays concentrate the water inside the bay, leading to rapid extinguishment. Figure 7 shows the temperature profile at the core of the test fire and shows a dramatic reduction in temperature after the activation of the water fog.

Although air atomising nozzles produce high velocity fogs, the amounts of water used were too low to extinguish efficiently a test fire.

Coarse sprays in common with those used in a recent telecommunication fire suppression study [8] and 'sprinkler like' sprays were not effective against this fire challenge. These large droplet size, low thrust sprays were unable to negotiate obstacles and penetrate to the seat of the fire.

Room fogging experiments were less successful than the 'in-cabinet' tests as the concentration of water around the core of the fire was not high enough to bring about rapid extinguishment. Total flood water fog or sprinkler systems were not favoured by GTE in any case (vide supra).

Frontal nozzle arrays were effective as there was less obstruction to the spray. However, it is difficult to envisage the unobtrusive installation of such a manifold.

Experiments conducted on live switch gear showed that water fog did not damage the electrical equipment contained in the bay. The shock hazard associated with such equipment is low as the power was cut-off to the switch gear bays upon the activation of the fog. The switch gear bays became fully operational when dry. In addition, there was no reduction in performance of the optimum single fluid, high pressure nozzle array when suppressing a fire in a live switch relative to an unpowered bay.

The simple conductivity measurements revealed that the smoke produced by the burning circuit boards was more conductive than tap water, explaining why, in some experiments, trips were activated before the actuation of the water spray.

5. CONCLUSIONS

This study shows that the PCBs contained in the 2EAS switch gear were a substantial fire threat and if a fire occurred, the loss of revenue due to down time and salvage could be enormous.

As a potential candidate for fire suppression in these situations, 'in-cabinet' water fog has been found to be extremely effective, safe and non-destructive. Coupled with this, water is non-toxic, environmentally friendly and cheap.

There is no foreseeable problem in designing a fully integrated 'in-cabinet' system including 'double knock' (dual) activation of a clean, initially dry spray manifold. Therefore, the drawbacks of conventional water systems (large volumes of water, accidental discharge, leaks and impure water) have been addressed and negated.

6. CURRENT TEST WORK

It is recognised that these trials are confined to one particular type of telecommunication cabinet and that more work is required on different types of electronic equipment before a 'universal' protection system is available.

A recent visit to Mercury Communications premises in central London showed there to be a variety of systems hardware of differing function and geometry where direct impingement of water fog was not possible. In addition, the fire threat associated with bundles of coaxial cables laid in metal trays positioned above the cabinets would have to be addressed.

Links have been forged between Mercury Communications with a view to further testing of 'in cabinet' water spray. An on-going project using Mercury Communications electronic cabinets has shown water fog to be versatile. Mercury's fully-enclosed cabinets usually contained PCBs; however, many different types of equipment are also contained, making direct impingement of water fog from either the top or bottom impossible.

Figures 8 and 9 show diagrams of Mercury equipment and the fire challenge tackled in the current test program. Results so far show that obscured fires can be extinguished by water fog produced by nozzles placed inside the cabinet using less than 1 L of water. These test fires are believed to be extinguished by the cooling effect of entrained water fog and the inerting effect of water vapour. Although this testing is in its early stages, it is envisaged that the 'in cabinet fogging' system may be successfully applied to a wide variety of telecommunication and other electronic installations.

7. ACKNOWLEDGEMENT

We are extremely grateful to both GTE and Mercury communications for the donation of their telecommunication equipment and their technical support during this project. We are also grateful to Dr. J. A. Senecal of the Fenwal Safety Systems Combustion Research Centre for his help and hospitality.

REFERENCES

1. The Montreal Protocol on substances that deplete the ozone layer., Final Act, United Nations Environment Program, (HMSO, CM977), September 1987.

2. Cortina, T. A. Halon Alternatives Research Corporation (HARC), UNEP Updated, 9th April 1992.

3. Heskestad, G. H. J. Fire and Flammability, Vol. 11, pp. 24, 1980

4. Rasbash, D. J. Fire Research Abstracts and Reviews, Vol 4, pp. 28, 1962.

5. Bolting, R. and Beaumont, P. Research Project concerning fire protection of BPO type main distribution frames in telephone exchanges, draft version of research report, Telecom Corporation of New Zealand Limited, May 1992.

6. Hindsdale Central Office Fire Final Report, Joint Report of: Office of the State Fire Marshall, 31 SO Executive Park Drive, Springfield, Illinois, 62703-4599 and Illinois Commerce Commission Staff, 527 East Capital Avenue, Springfield, Illinois 62794-6928, March 1989.

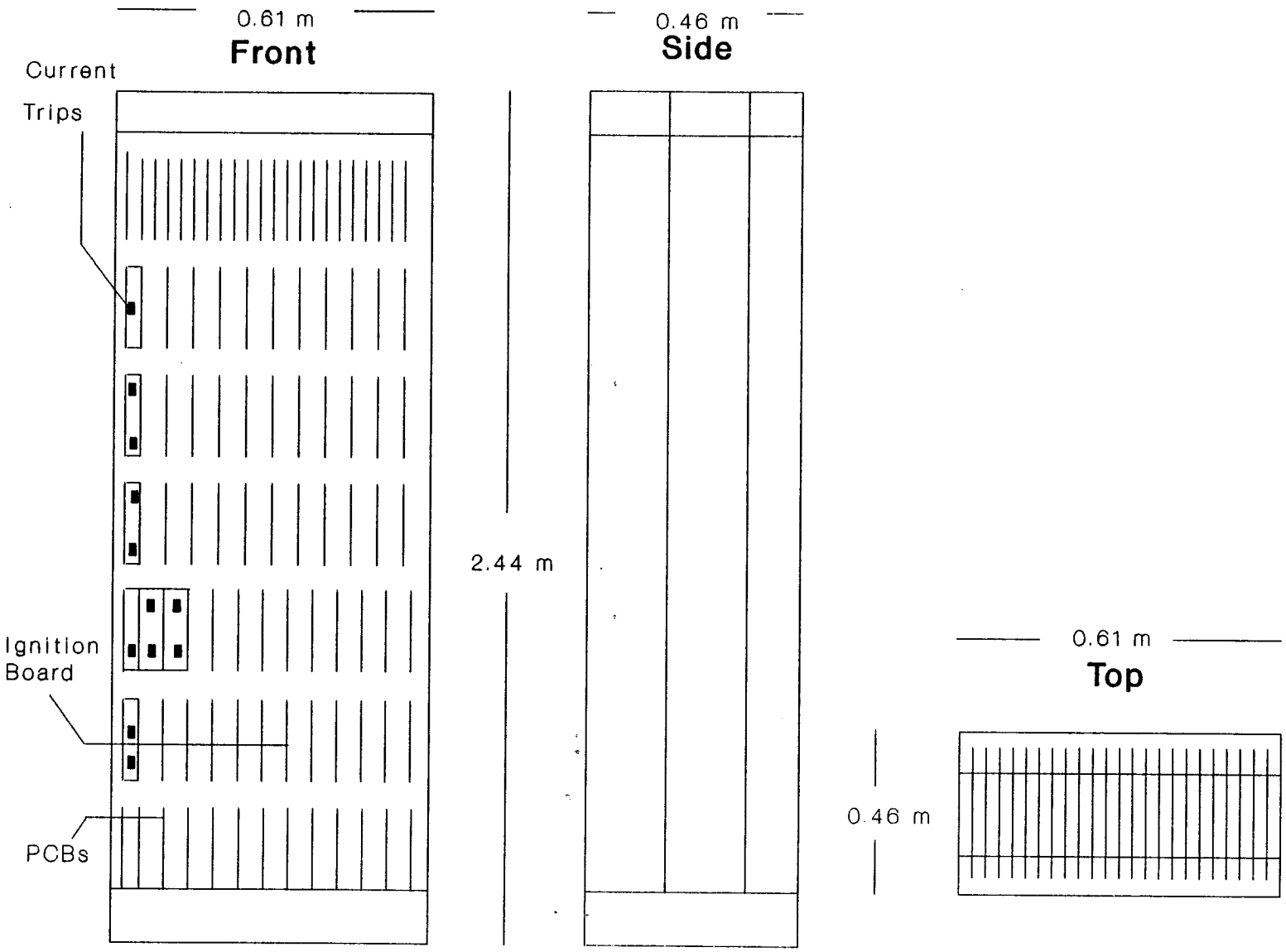

Figure 1: A Typical Switch Gear Bay and Position of the Ignition Board

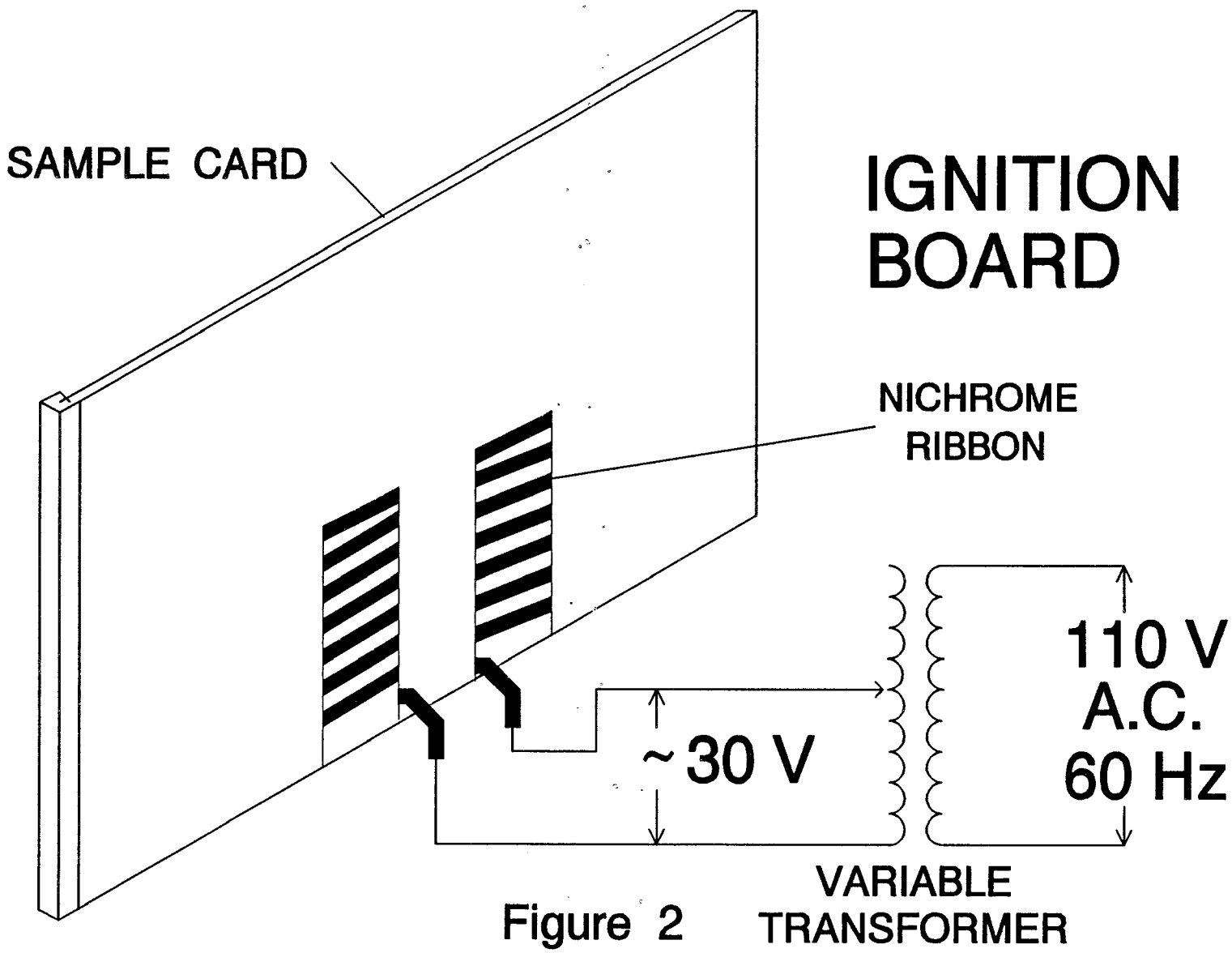
SAMPLE CARD
IGNITION BOARD
NICHROME RIBBON
~30 V
110 V A.C. 60 Hz
VARIABLE TRANSFORMER

Figure 2

THERMOCOUPLE POSITIONS

TESTS 2 - 18, 22, 28 - 34.

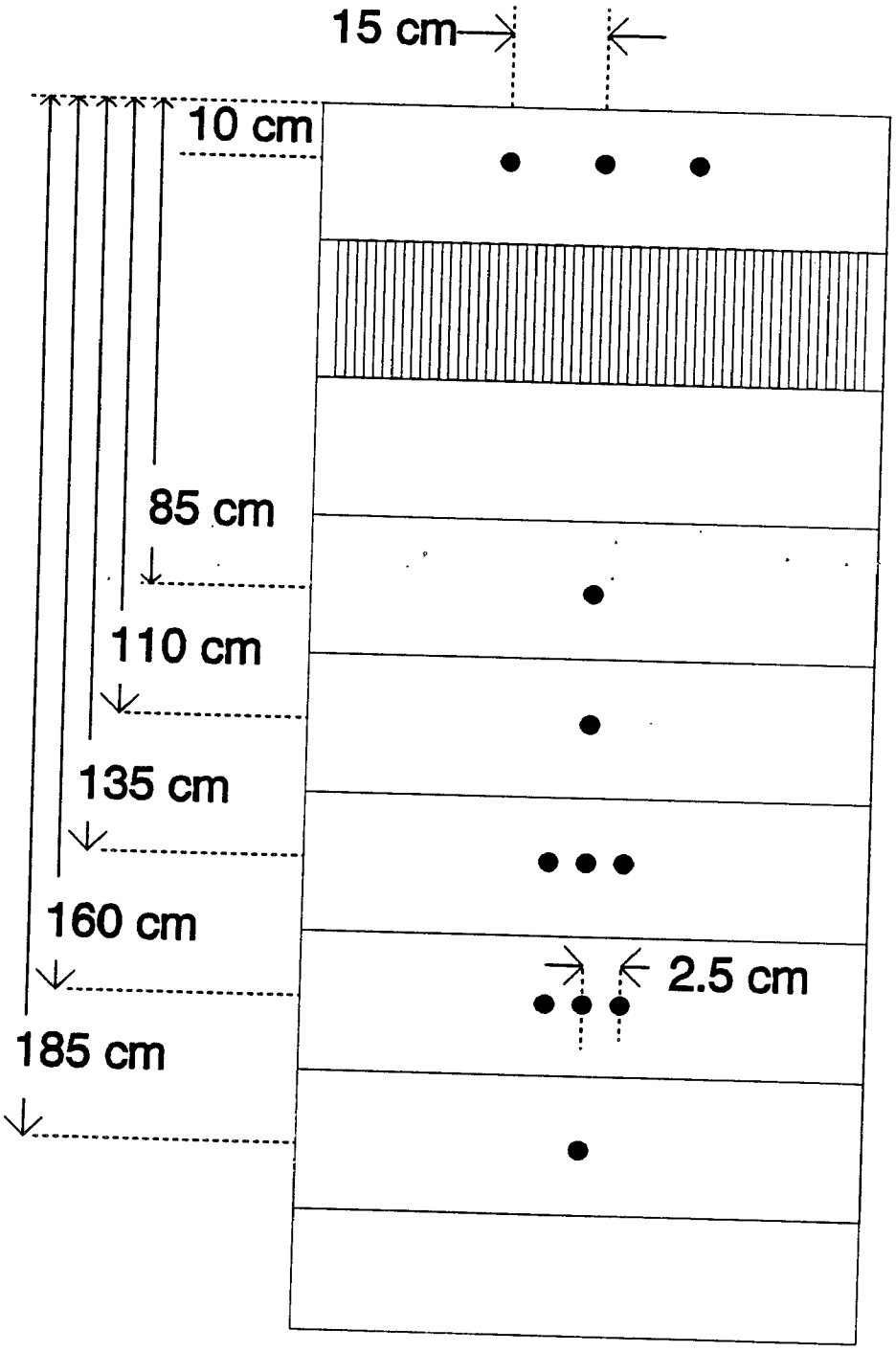

Figure 3

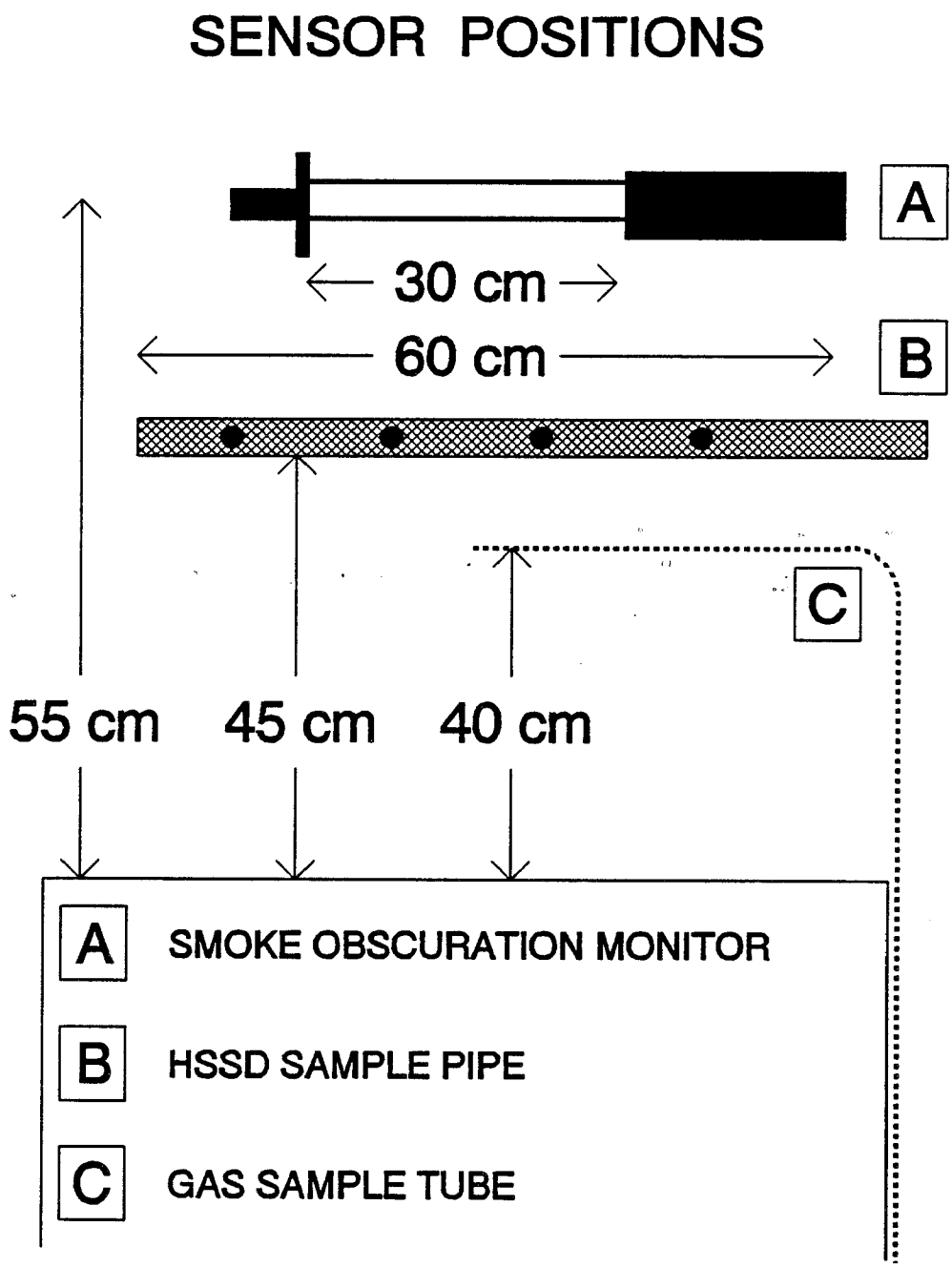
SENSOR POSITIONS
A
30 cm
60 cm
B
C
55 cm
45 cm
40 cm
A SMOKE OBSCURATION MONITOR
B HSSD SAMPLE PIPE
C GAS SAMPLE TUBE

Figure 4

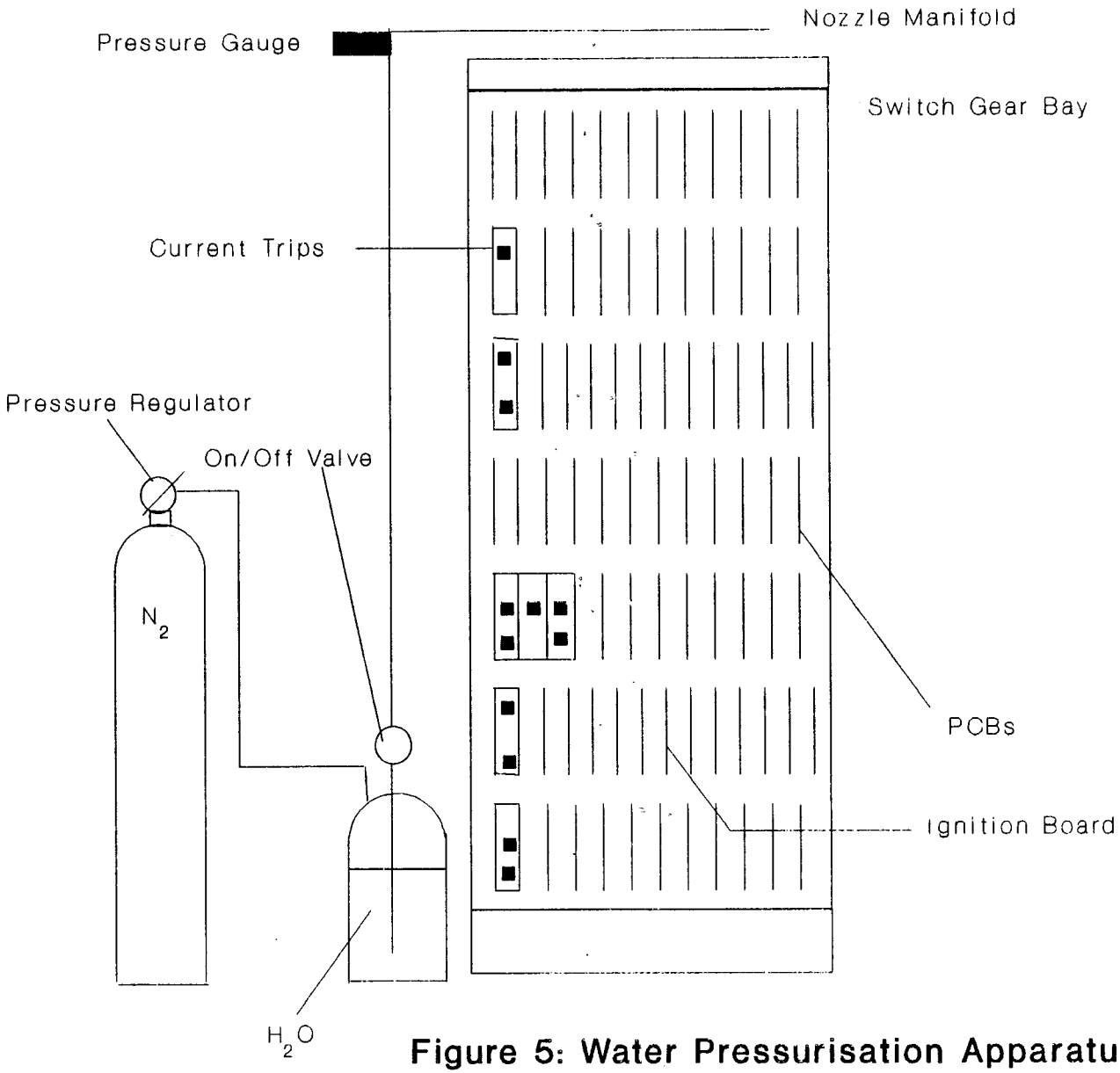

Figure 5: Water Pressurisation Apparatus

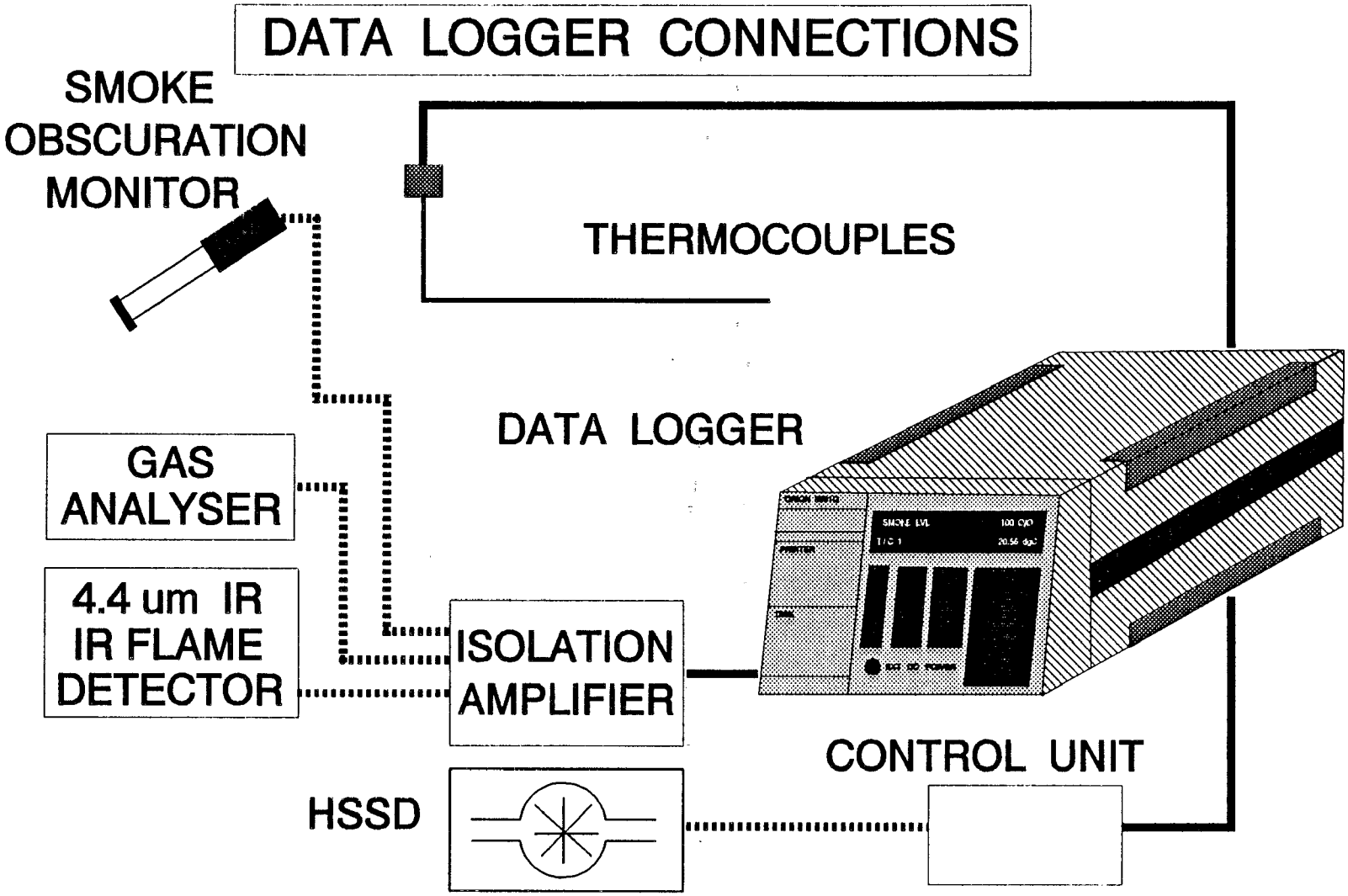
DATA LOGGER CONNECTIONS
SMOKE OBSCURATION MONITOR
THERMOCOUPLES
DATA LOGGER
GAS ANALYSER
4.4 um IR IR FLAME DETECTOR
ISOLATION AMPLIFIER
CONTROL UNIT
HSSD

Figure 6

FIGURE 7

TEMPERATURE PROFILE FOR EXTINGUISHMENT BY HIGH VELOCITY FOG

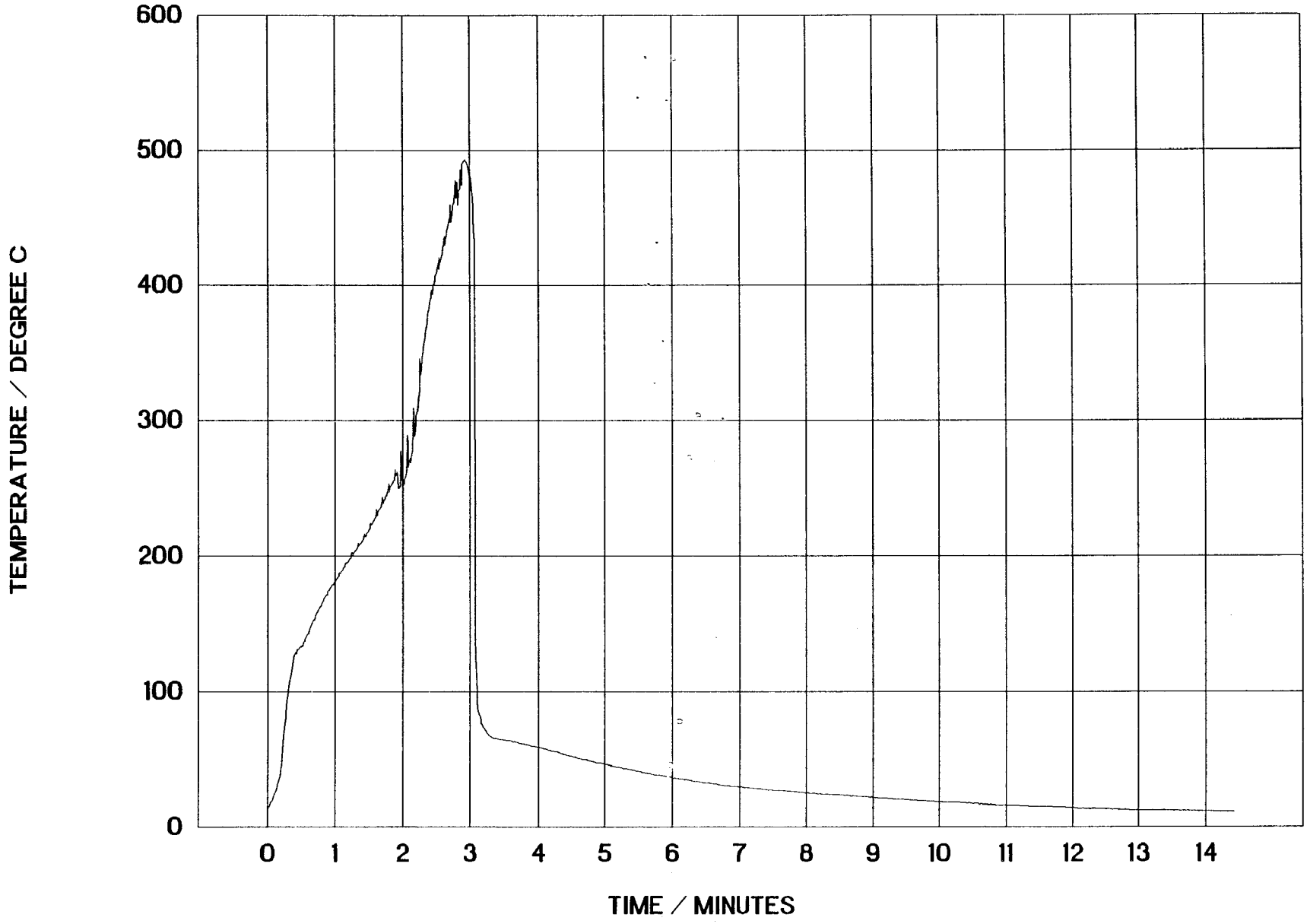

Figure 8: External features of an enclosed telecommunication cabinet

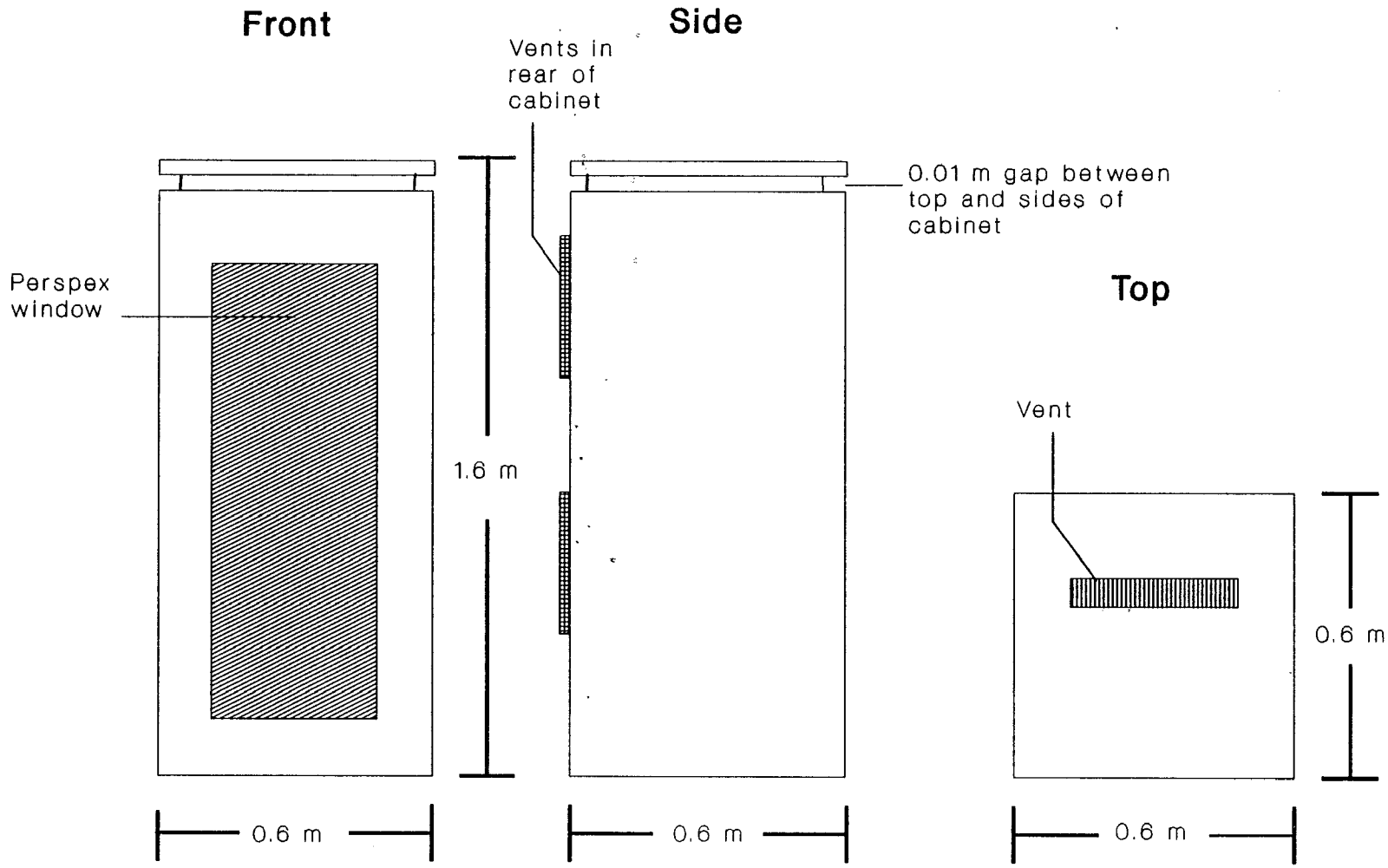
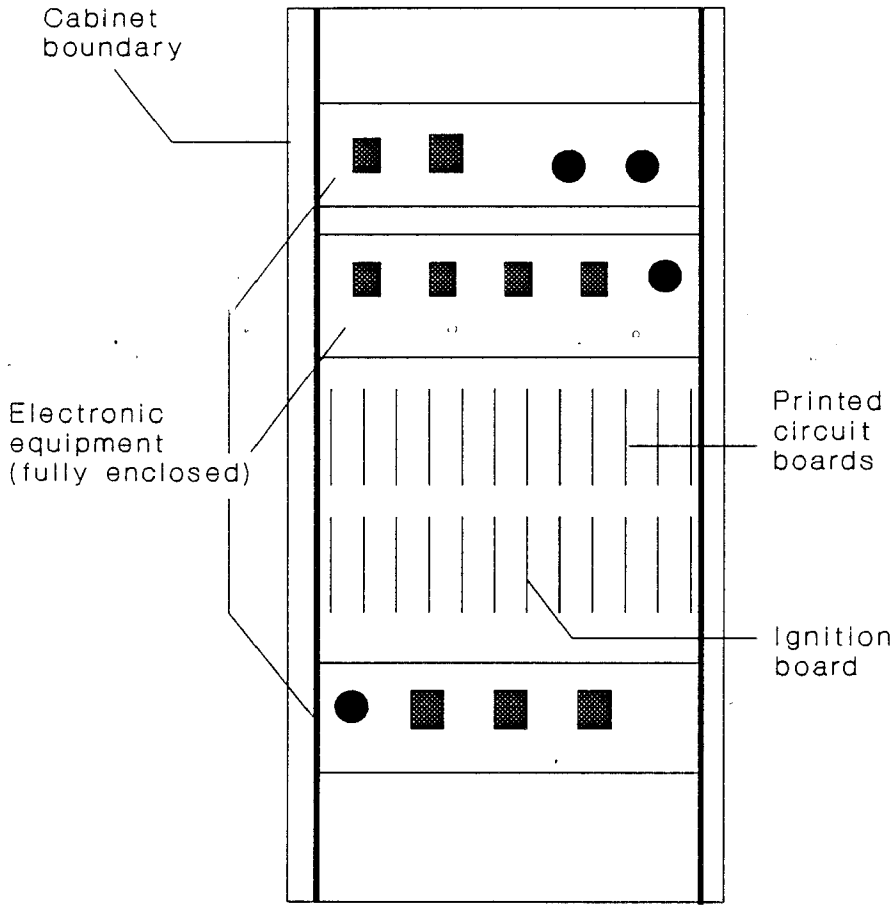
Figure 9: Fire challenge inside an enclosed telecommunication cabinet